REV	DESCRIPTION	DATE
A	PRODCUTION RELEASE	10/16/2024

HAL-QP-1X1000MH-ILS

LARSON ELECTRONICS®

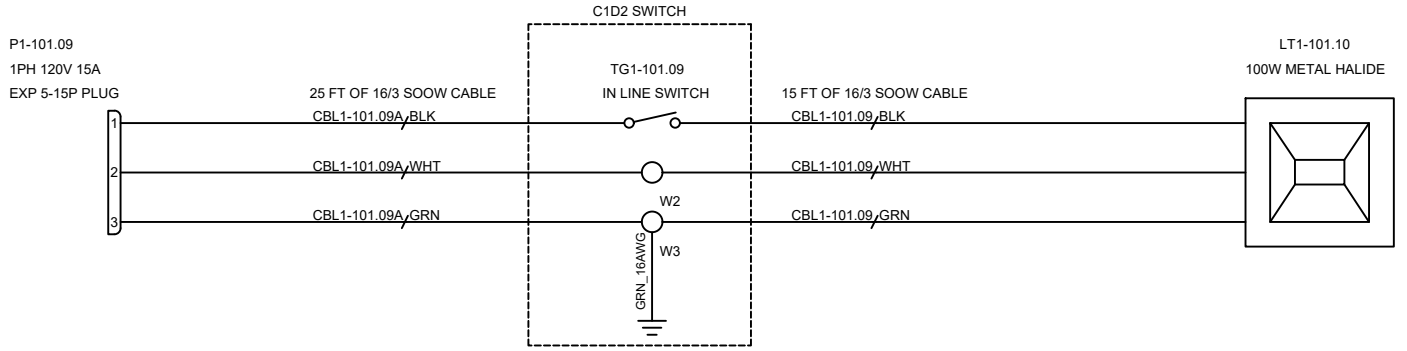

TAGS	QTY	CATALOG	DESCRIPTION
P1-101.09	1	UNV00005389	EXPLOSION PROOF 125V 15A PLUG
LT1-101.10	1	UNV00004131	1000W METAL HALIDE LAMP C1D2 MULTI VOLTAGE
TG1-101.09	1	UNV00005436	1P 20A EXP PROOF TUMBLER SWITCH
CBL1-101.09	1	UNV00007524	CORD 16/3 SOOW UL 90C BLK CABLE

LARSON ELECTRONICS
9419 E US HWY 175,
KEMP, TX 75143

TITLE			
HAL-QP-1X1000MH-ILS			
DRAWN BY	DATE	REV	
S.Desai	10/16/2024	A	
CHECKED BY	SHEET #	DRAWING #	
J.Maldonado	1 OF 1	101	