REV	DESCRIPTION	DATE
A	PRODUCTION RELEASE	10-31-2023

HALP-EMG-48-2L-LED-XX-XX-XX

LARSON ELECTRONICS®

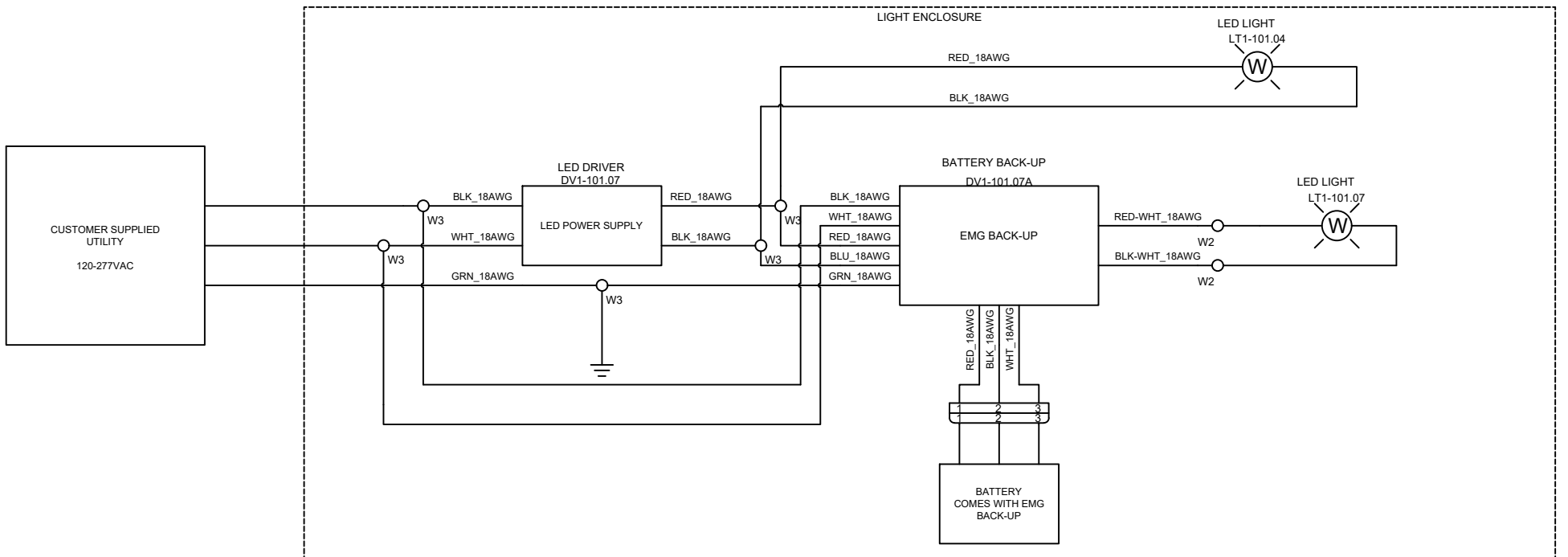

LARSON ELECTRONICS 9419 E US HWY 175, KEMP, TX 75143	TITLE: HALP-EMG-48-2L-LED-XX-XX-XX		
	DRAWN BY: J.Maldonado	DATE: 10-31-2023	REV: A
	CHECKED BY: S.Desai	SHEET #: 1 OF 1	DRAWING #: 101