REV	DESCRIPTION	DATE
A	PRODUCTION RELEASE	07/20/2022

HALP-24-2L-LED-1227-0.75IN-SFC4000K

LARSON ELECTRONICS®

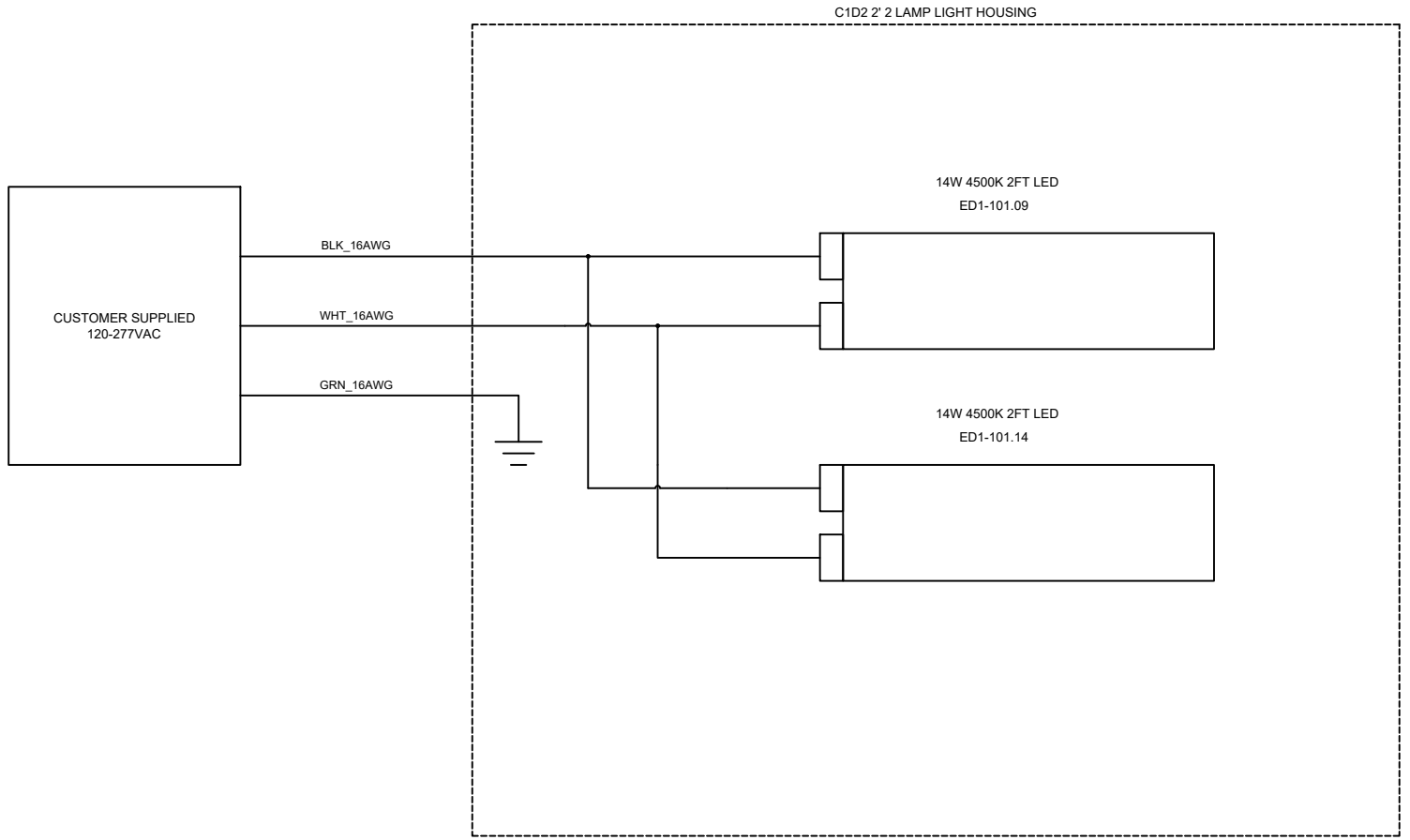

TAGS	QTY	CATALOG	DESCRIPTION
ED1-101.09 ED1-101.14	2	UNV00008087	120-277V 14W 4500K 2FT LED

LARSON ELECTRONICS

9419 E US HWY 175,
KEMP, TX 75143

TITLE: HALP-24-2L-LED-1227-0.75IN-SFC4000K

DRAWN BY	DATE	REV
S. MAZZOCCHI	07/20/2022	A
CHECKED BY	SHEET #	DRAWING #
S. DESAI	1 OF 1	101