REV	DESCRIPTION	DATE
A	PRODUCTION RELEASE	8/27/2024

MPD-MT-BBT-208V-230V-20.8A-6.2FT-6.15

LARSON ELECTRONICS®

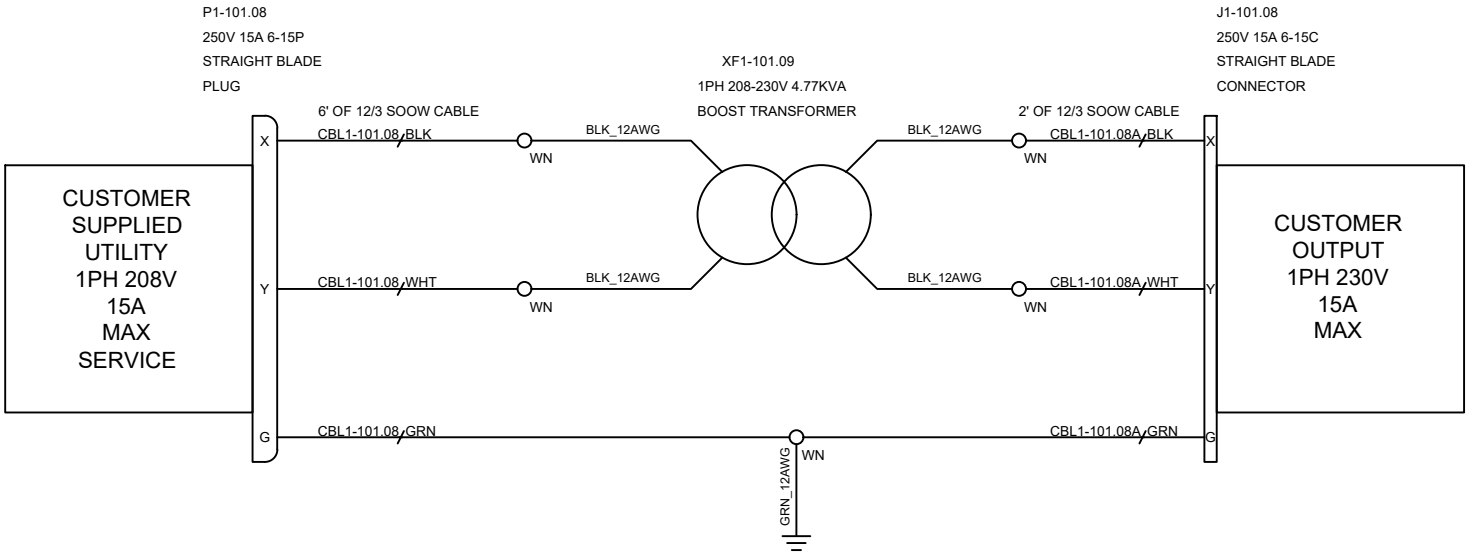

USE THIS DIAGRAM FOR INTERNAL WIRING OF THE TRANSFORMER

FIG. H

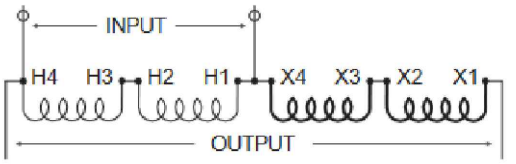

TAGS	QTY	CATALOG	DESCRIPTION
P1-101.08	1	UNV00011424	PLUG, STRAIGHT PLUG 6.15P 250VAC 15 A
J1-101.08	1	UNV00011425	2P 250V 15A NEMA 6-15C CONNECTOR
WN	5	UNV00002173	RED WING TWIST WIRE NUT
CBL1-101.08 CBL1-101.08A	2	UNV00002908	12/3 SOOW CABLE
XF1-101.09	1	UNV00008989	1PH 4.77KVA 208-230V BUCK BOOST TRANSFORMER

LARSON ELECTRONICS

9419 E US HWY 175,
KEMP, TX 75143

TITLE: MPD-MT-BBT-208V-230V-20.8A -6.2FT-6.15

DRAWN BY	DATE	REV
S.Desai	8/27/2024	A
CHECKED BY	SHEET #	DRAWING #
J.Maldonado	1 OF 1	101