REV	DESCRIPTION	DATE
A	PRODUCTION RELEASE	10/12/2023

MPD-CM1-NTL.20AB-SE1SM-AA-1.L10-M1

LARSON ELECTRONICS®

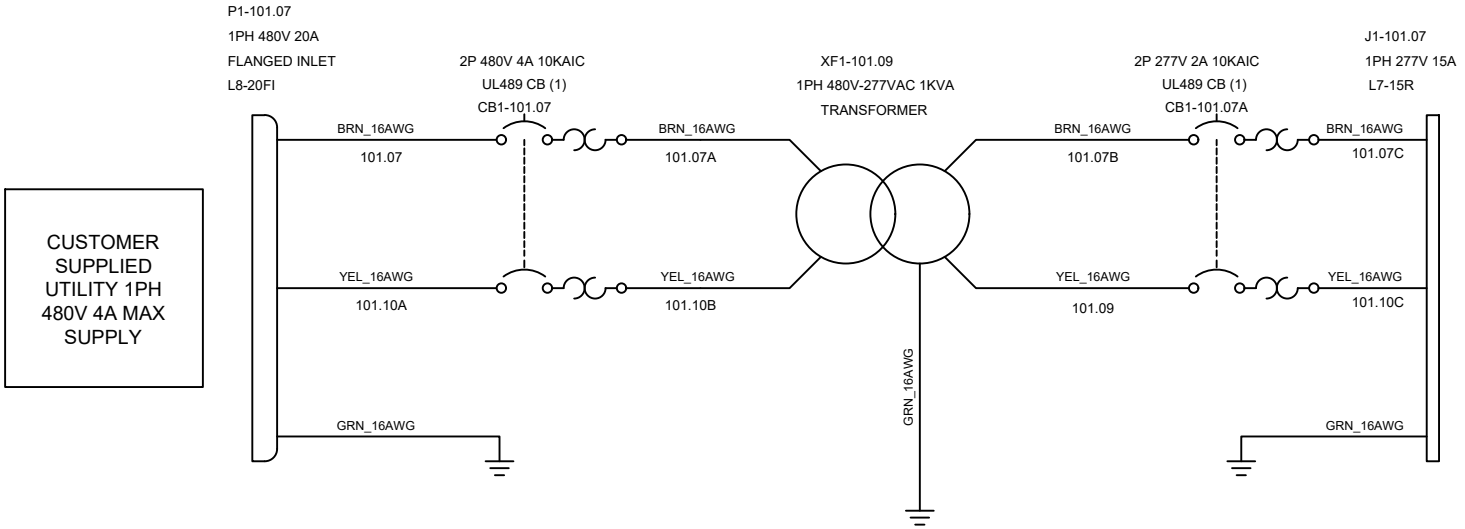

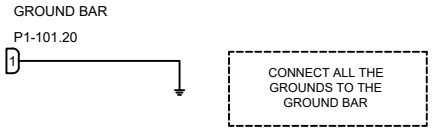

TAGS	QTY	CATALOG	DESCRIPTION
P1-101.07	1	N/A	Turnlok® Flanged Inlet, 3-Wire 20A 480V, L8-20FI
J1-101.07	1	N/A	277 VAC, 15 A, 2 Poles, 3 Wires, NEMA L7-15R
P1-101.20	1	UNV00013942C	GROUND BAR KIT
CB1-101.07A	1	N/A	2P 277VAC 2A UL489 DIN RAIL MOUNT BREAKER
CB1-101.07	1	N/A	2P 480V 4A UL489 DIN RAIL MOUNT BREAKER
XF1-101.09	1	UNV00012252	480/277-208/277VAC 1PH 1KVA TRANSFORMER

LARSON ELECTRONICS
9419 E US HWY 175,
KEMP, TX 75143

TITLE: MPD-CM1-NTL.20AB-SE1SM-AA-1.L10-M1

DRAWN BY	DATE	REV
S.Desai	10/12/2023	A
CHECKED BY	SHEET #	DRAWING #
J.Maldonado	1 OF 1	101