REV	DESCRIPTION	DATE
A	PRODUCTION RELEASE	12/27/2024

MPD-CM5-869.60AB-SE10SW-CZ-4.N10-M2

LARSON ELECTRONICS®

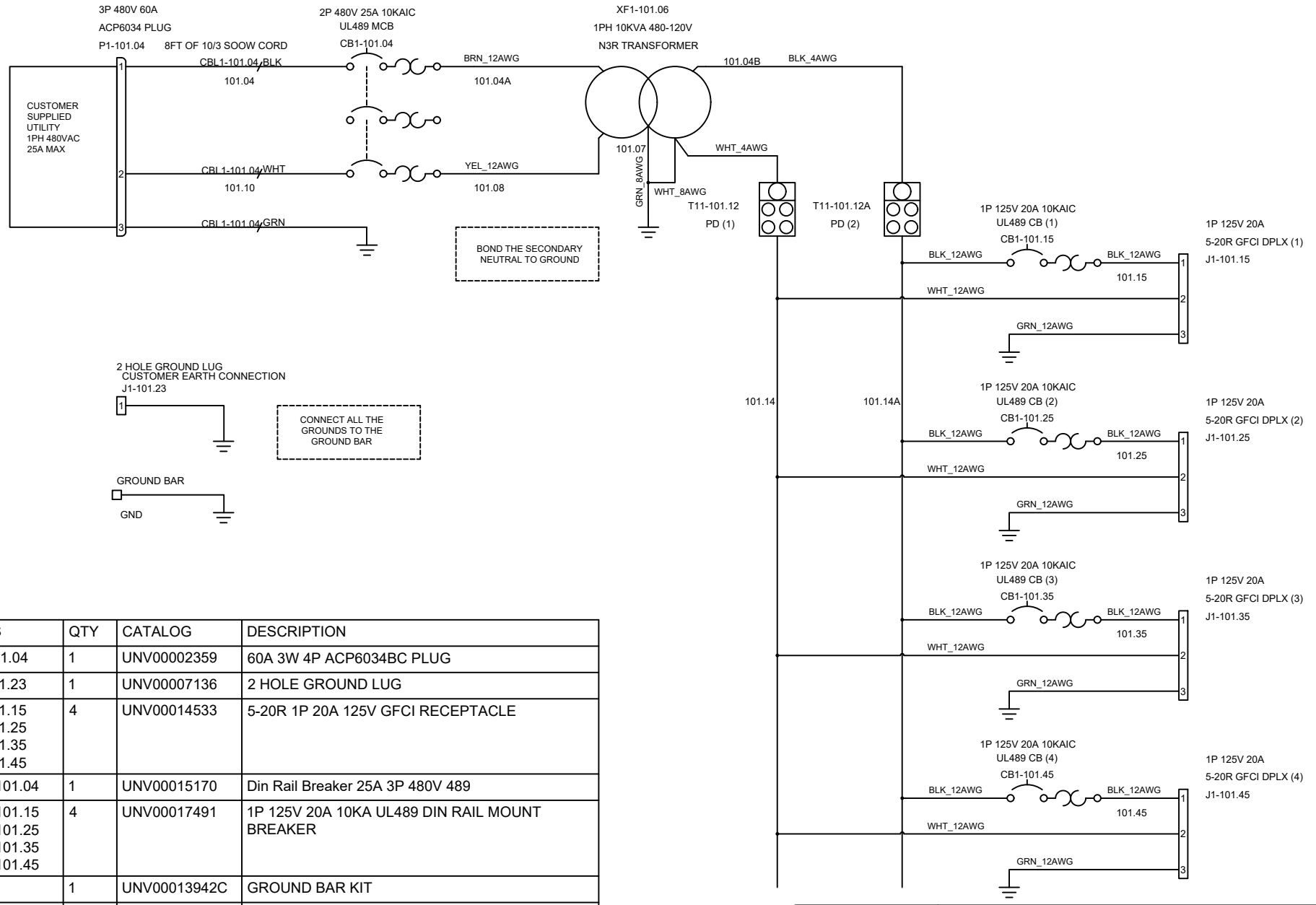

TAGS	QTY	CATALOG	DESCRIPTION
P1-101.04	1	UNV00002359	60A 3W 4P ACP6034BC PLUG
J1-101.23	1	UNV00007136	2 HOLE GROUND LUG
J1-101.15 J1-101.25 J1-101.35 J1-101.45	4	UNV00014533	5-20R 1P 20A 125V GFCI RECEPTACLE
CB1-101.04	1	UNV00015170	Din Rail Breaker 25A 3P 480V 489
CB1-101.15 CB1-101.25 CB1-101.35 CB1-101.45	4	UNV00017491	1P 125V 20A 10KA UL489 DIN RAIL MOUNT BREAKER
GND	1	UNV00013942C	GROUND BAR KIT
T11-101.12 T11-101.12A	2	UNV00015084	POWER DISTRIBUTION BLOCK 175 A 600V 1-4 OPENING
CBL1-101.04	1	UNV00007525	10/3 SOOW CABLE
XF1-101.06	1	UNV00013878	240-120V1PH 10KVA TRANSOFRMER

LARSON ELECTRONICS
9419 E US HWY 175,
KEMP, TX 75143

TITLE: MPD-CM5-869.60AB-SE10SW-CZ -4.N10-M2

DRAWN BY	DATE	REV
S.Desai	12/27/2024	A
CHECKED BY	SHEET #	DRAWING #
	1 OF 1	101