REV	DESCRIPTION	DATE
A	PRODUCTION RELEASE	08/04/2022

EPL-PM-100LED-220X24I-100-6.15-60B

LARSON ELECTRONICS®

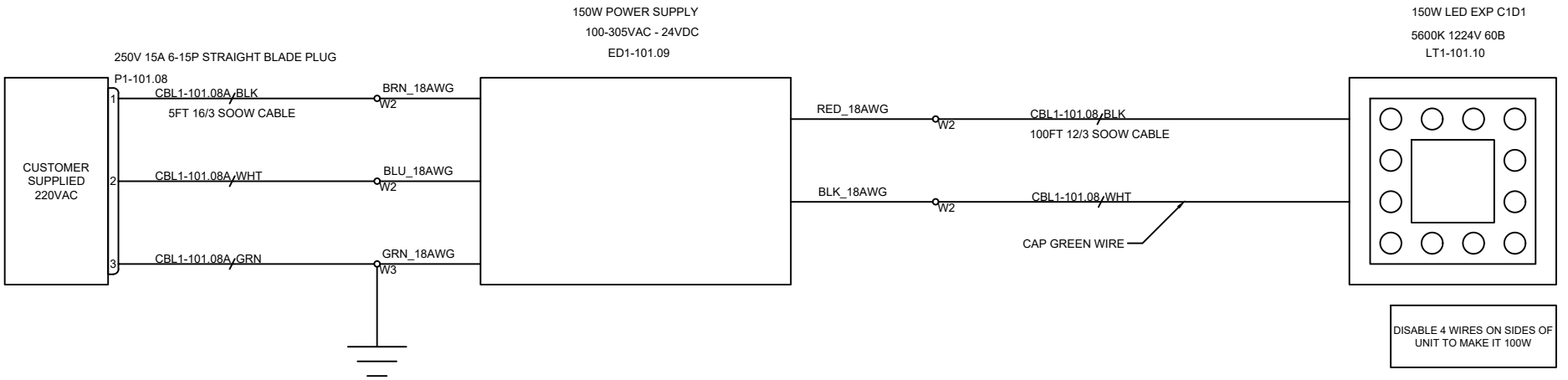

TAGS	QTY	CATALOG	DESCRIPTION
P1-101.08	1	UNV00011424	PLUG, STRAIGHT PLUG 6.15P 250VAC 15 A
LT1-101.10	1	UNV00007998	LV 150W LED EXP PROOF LIGHT 5600K.
ED1-101.09	1	UNV00005978	90-305VAC -24V DC 150W POWER SUPPLY
W3	1	UNV00011954	3 HOLE WAGO
W2	4	UNV00009802	2 HOLE WAGO
CBL1-101.08	100FT	UNV00002908	12/3 SOOW CABLE
CBL1-101.08A	5FT	UNV00007524	16/3 SOOW CABLE

LARSON ELECTRONICS
9419 E US HWY 175,
KEMP, TX 75143

TITLE: EPL-PM-100LED-220X24I-100-6.15-60B

DRAWN BY	DATE	REV
S. MAZZOCCHI	08/04/2022	A
CHECKED BY	SHEET #	DRAWING #
A. CIBISOVS	1 OF 1	101