REV	DESCRIPTION	DATE
A	QUOTE	10/22/2026

MPD-CS1-CS.50AF-SZ0-Z-1.C04-1.L09-1.L08-4.N10-M1

LARSON ELECTRONICS®

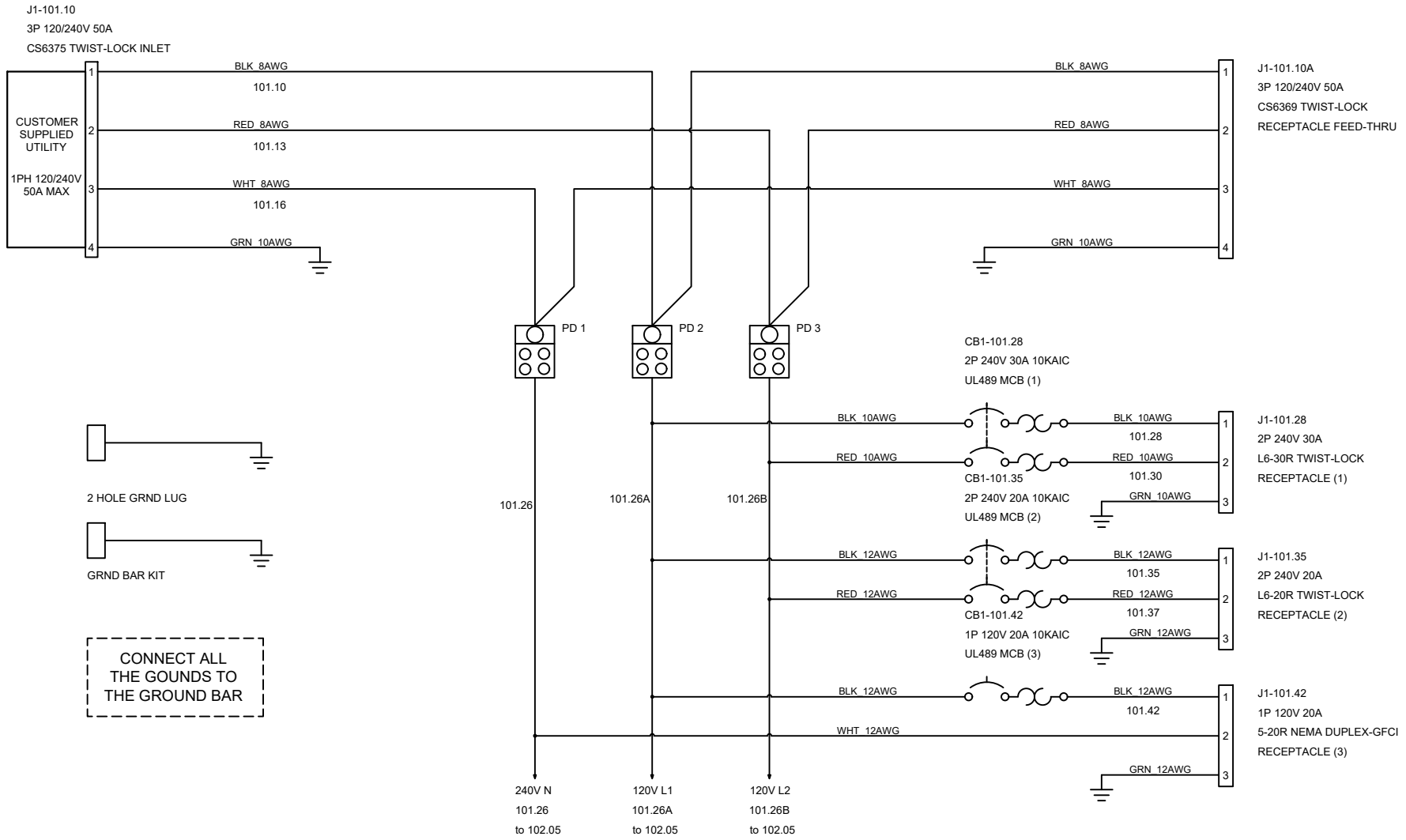

LARSON ELECTRONICS
9419 E US HWY 175,
KEMP, TX 75143

TITLE			
MPD-CS1-CS.50AF-SZ0-Z-1.C04-1.L09-1.L08-4.N10-M1			
DRAWN BY	DATE	REV	
L.Calib	10-22-2026	A	
CHECKED BY	SHEET #	DRAWING #	
	1 OF 2	101	

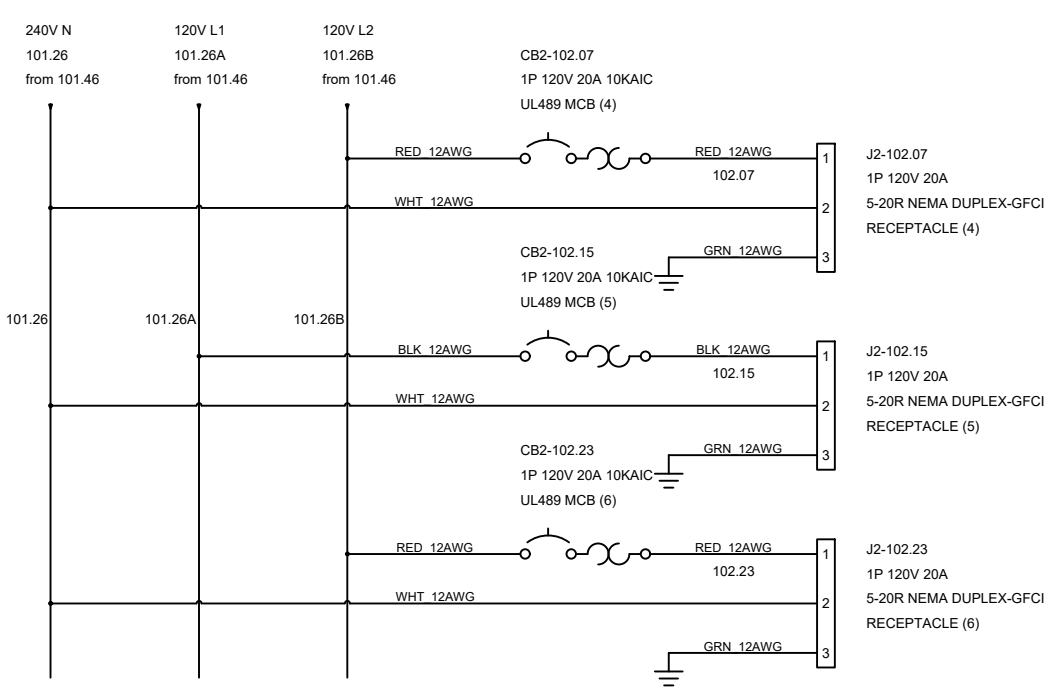

TAGS	QTY	CATALOG	DESCRIPTION
J1-101.10A	1	UNV00008818	CS6369 50A 250V 3P RECEPTACLE
J1-101.35	1	UNV00007125	2P 250V 20A L6-20R LOCKING RECEPTACLE
J1-101.28	1	UNV00016830	L6-30R COVER AND RECEPTACLE
2 HOLE GRND LUG	1	UNV00007136	2 HOLE GROUND LUG
J1-101.42 J2-102.07 J2-102.15 J2-102.23	4	UNV00014533	5-20R 1P 20A 125V GFCI RECEPTACLE
J1-101.10	1	UNV00013600	3P 4W 50A 125/250V LOCK RING CS6375 FLANGED INLET
CB1-101.42 CB2-102.07 CB2-102.15 CB2-102.23	4	UNV00017491	1P 125V 20A 10KA UL489 DIN RAIL MOUNT BREAKER
CB1-101.28	1	UNV00017628	2P 240V 30A UL489 CIRCUIT BREAKER
CB1-101.35	1	UNV00017853	2P 250V 20A UL489 DIN RAIL CIRCUIT BREAKER
PD 1 PD 2 PD 3	3	UNV00015084	POWER DISTRIBUTION BLOCK 175 A 600V 1-4 OPENING
GRND BAR KIT	1	UNV00013942C	GROUND BAR KIT

LARSON ELECTRONICS
9419 E US HWY 175,
KEMP, TX 75143

TITLE			
MPD-CS1-CS.50AF-SZ0-Z-1.C04-1.L09-1.L08-4.N10-M1			
DRAWN BY	L.Calib	DATE	10-22-2026
REV	A		
CHECKED BY		SHEET #	2 OF 2
DRAWING #	102		