REV	DESCRIPTION	DATE
A	PRODUCTION RELEASE	06/15/2022

EXPSG-TRN-LE1-1227-SP

LARSON ELECTRONICS®

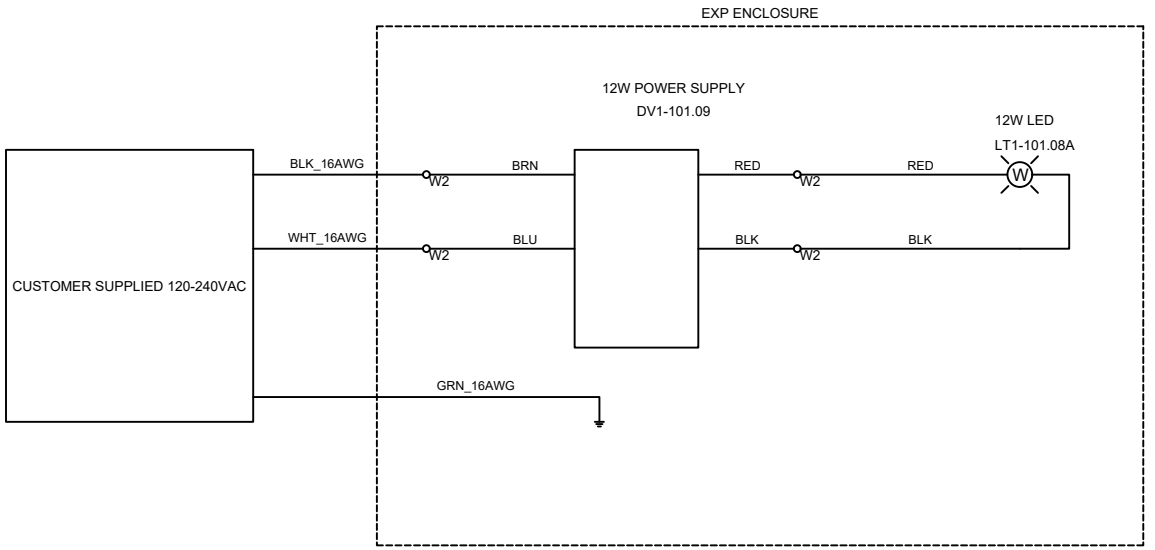

TAGS	QTY	CATALOG	DESCRIPTION
DV1-101.09	1		12W POWER SUPPLY 24V
LT1-101.08A	1	UNV00004101	25W CREE CANNON LIGHT
W2	4	UNV00009802	2 HOLE WAGO

LARSON ELECTRONICS

9419 E US HWY 175,
KEMP, TX 75143

TITLE			
EXPSG-TRN-LE1-1227-SP			
DRAWN BY	DATE	REV	
A. CIBISOVS	06/15/2022	A	
CHECKED BY	SHEET #	DRAWING #	
K. NGUYEN	1 OF 1	101	