REV	DESCRIPTION	DATE
A	PRODUCTION RELEASE	03/09/2022

SPLT-1.2K-400AL-ISDG-BC-R1

LARSON ELECTRONICS®

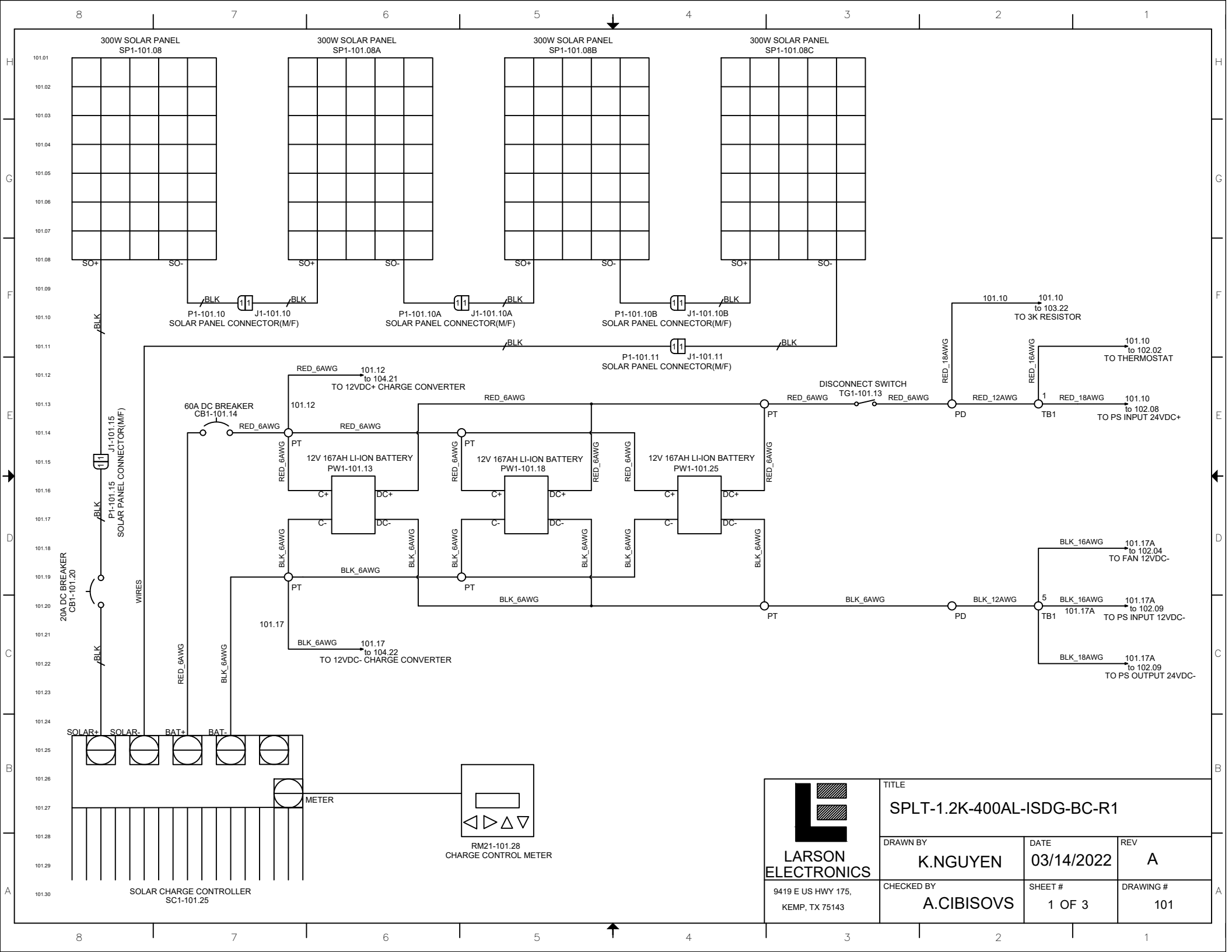

LARSON ELECTRONICS
9419 E US HWY 175,
KEMP, TX 75143

TITLE			
SPLT-1.2K-400AL-ISDG-BC-R1			
DRAWN BY	DATE	REV	
K.NGUYEN	03/14/2022	A	
CHECKED BY	SHEET #	DRAWING #	
A.CIBISOVS	1 OF 3	101	

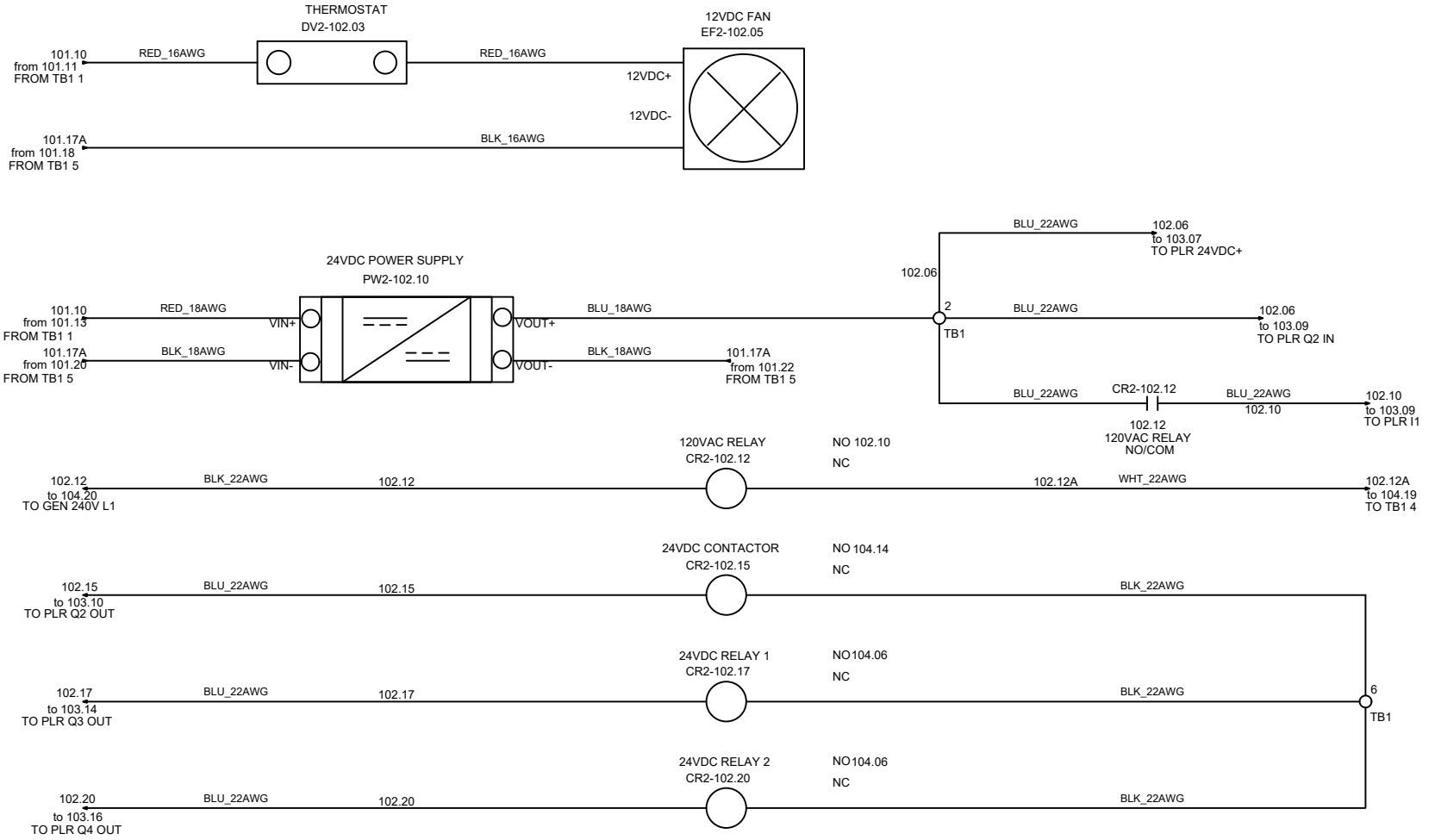

LARSON ELECTRONICS
9419 E US HWY 175,
KEMP, TX 75143

TITLE			
SPLT-1.2K-400AL-ISDG-BC-R1			
DRAWN BY	DATE	REV	
K.NGUYEN	03/14/2022	1	
CHECKED BY	SHEET #	DRAWING #	
A.CIBISOVS	2 OF 5	102	



LARSON ELECTRONICS
9419 E US HWY 175,
KEMP, TX 75143

TITLE			
SPLT-1.2K-400AL-ISDG-BC-R1			
DRAWN BY	DATE	REV	
K.NGUYEN	03/14/2022	A	
CHECKED BY	SHEET #	DRAWING #	
A.CIBISOVS	3 OF 5	103	

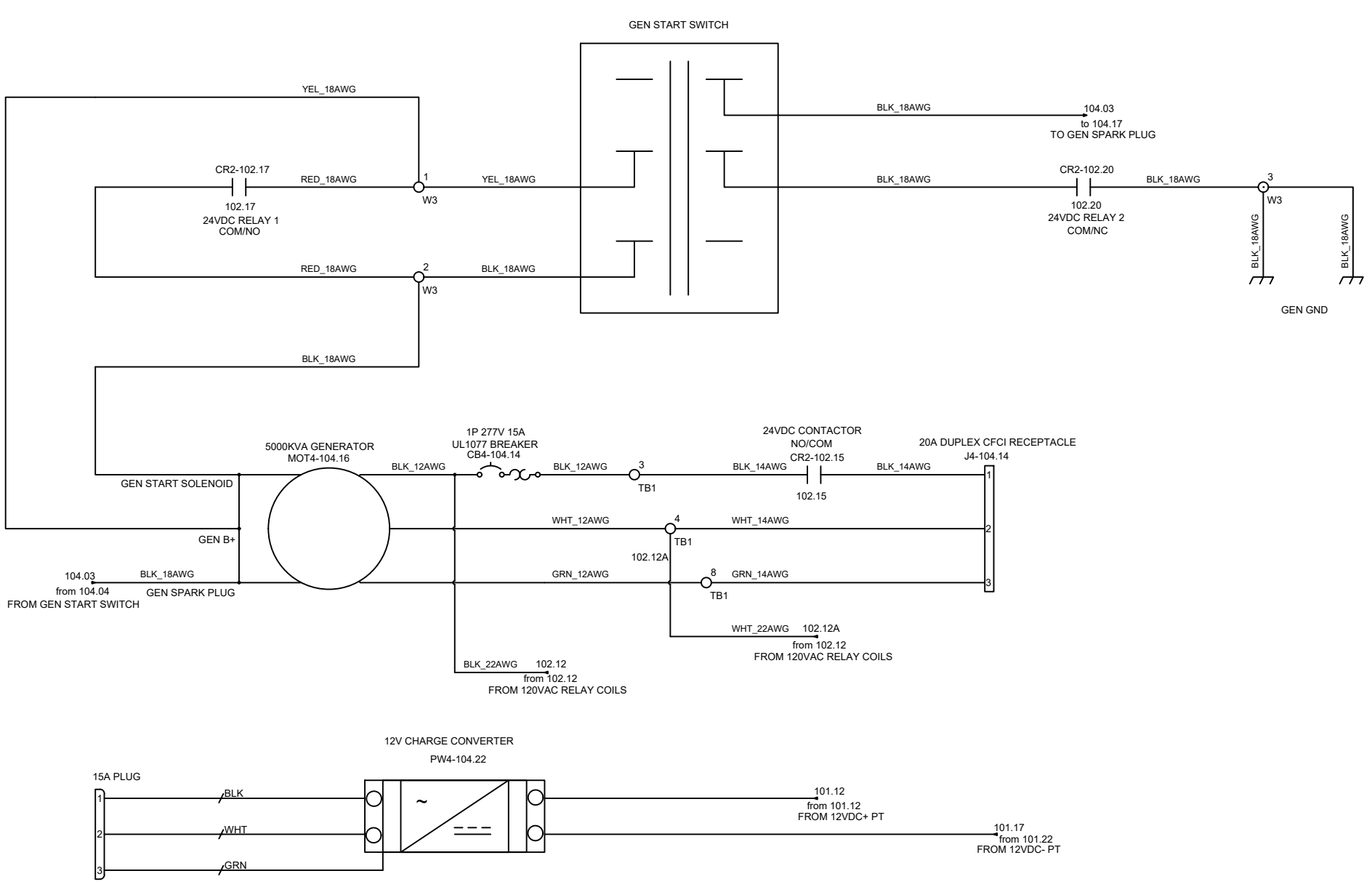

LARSON ELECTRONICS 9419 E US HWY 175, KEMP, TX 75143	TITLE: SPLT-1.2K-400AL-ISDG-BC-R1		
	DRAWN BY: K.NGUYEN	DATE: 03/14/2022	REV: A
	CHECKED BY: A.CIBISOVS	SHEET #: 4 OF 5	DRAWING #: 104

TB1													
Device1	Pin1	Wire1	Type1	T1	Number	T2	Manufacturer	Catalog	Type2	Wire2	Pin2	Device2	Jumper
DV2-102.03		101.10	RED_16AWG		1		PHOENIX CONTACT	UNV0001397 4	RED_12AWG	101.10	101.10	PD	
PW2-102.10	VIN+	101.10	RED_18AWG										
PLR3-103.16	VIN+	102.06	BLU_20AWG		2		PHOENIX CONTACT	UNV0001397 4	BLU_18AWG	102.06	VOUT+	PW2-102.10	
PLR3-103.16	Q2 IN	102.06	BLU_20AWG						BLU_20AWG	102.06		CR2-102.12	
CB4-104.14			BLK_12AWG		3		PHOENIX CONTACT	UNV0001397 4	BLK_14AWG			CR2-102.15	
CR2-102.12		102.12A	WHT_20AWG		4		UTILITY ELECTRICAL CO LD	UNV0001195 4	WHT_12AWG	102.12A		MOT4-104.16	
J4-104.14	2	102.12A	WHT_14AWG										
EF2-102.05		101.17A	BLK_16AWG		5		PHOENIX CONTACT	UNV0001397 5	BLK_12AWG	101.17A	101.17A	PD	
PW2-102.10	VIN-	101.17A	BLK_18AWG						BLK_18AWG	101.17A	VOUT-	PW2-102.10	
CR2-102.15			BLK_20AWG		6		PHOENIX CONTACT	UNV0001397 5	BLK_20AWG			CR2-102.17	
CR2-102.20			BLK_20AWG										
PLR3-103.16	VIN-		BLK_20AWG		7		PHOENIX CONTACT	UNV0001397 5	BLK_18AWG			R3-103.11	
MOT4-104.16			GRN_12AWG		8		PHOENIX CONTACT	UNV0001398 9	GRN_14AWG		3	J4-104.14	

LARSON ELECTRONICS
9419 E US HWY 175,
KEMP, TX 75143

TITLE			
SPLT-1.2K-400AL-ISDG-BC-R1			
DRAWN BY	DATE	REV	
K.NGUYEN	03/14/2022	A	
CHECKED BY	SHEET #	DRAWING #	
A.CIBISOVS	5 OF 6	105	

TAGS	QTY	CATALOG	DESCRIPTION
J4-104.14	1	UNV00002760	5-20R DUPLEX RECEPTACLE 125V 20A GFCI
P1-101.10 P1-101.10A P1-101.10B P1-101.11 P1-101.15	5	UNV00001349	SOLAR CONNECTOR MALE
J1-101.10 J1-101.10A J1-101.10B J1-101.11 J1-101.15	5	UNV00001350	SOLAR CONNECTOR FEMALE
CB1-101.20	1	UNV00001347	CIRCUIT BREAKER, 20A 150VDC, 1-POLE, DIN MOUNT,
CB1-101.14	1	UNV00001791	60AMP 12-48VDC BREAKER
CB4-104.14	1	UNV00015143	15A 1P 277 UL 1077 BREAKER
CR2-102.12	1	UNV00010791	GENERAL PURPOSE RELAYS9A MINI POWER SPDT-NO, 30A
CR2-102.17 CR2-102.20	2	UNV00009121	24VDC GENERAL PURPOSE RELAY SPDT
CR2-102.15	1	WDP30-1L-24	24VAC @ COILS CONTACTOR 32A SHUNT TRIP
EF2-102.05	1	UNV00015879	12VDC ELECTRIC COOLING FAN 1400CFM
RM21-101.28	1	UNV00001332	CHARGE CONTROL REMOTE DIGITAL METER
SC1-101.25	1	UNV00014371	TRISTAR 45A 12-48V SOLAR CHARGE CONTROLLER
SP1-101.08 SP1-101.08A SP1-101.08B SP1-101.08C	4	UNV00005453	300W SOLAR PANEL
PLR3-103.16	1	UNV00007648	24VDC PLR W/ ANALOG INPUT
DV2-102.03	1	UNV00009886	THERMOSTAT
MOT4-104.16	1	UNV00014160	5000KVA DIESEL POWERED GENERATOR
PW2-102.10	1	UNV00014102	CONVERTER 12-24VDC 8A
PW4-104.22	1	UNV00014437	55A CHARGER CONVERTER POWER SUPPLY
PW1-101.13 PW1-101.18 PW1-101.25	3	UNV00011978	LITHIUM BATTERY 12V 176AH
R3-103.17	1	RESISTOR	3000 OHMS RESISTOR 1/4W
R3-103.11	1	RESISTOR	2800 OHMS RESISTOR 1/4W
TG1-101.13	1	UNV00014267	CONTROL SWITCH 300A 24VDC
PD	2	UNV00015084	POWER DISTRIBUTION BLOCK 175A 600V
TB1	3	UNV00013974	4 HOLE GREY TB
TB1	4	UNV00013975	4 HOLE BLUE TB
TB1	1	UNV00013976	RED JUMPER FOR 2 HOLE TERM BLOCK
TB1	1	UNV00013989	2 HOLE GREEN TB
PT	6	UNV00008883	3 HOLE POLARIS 4-14AWG
W3	3	UNV00011954	3 HOLE WAGO

LARSON ELECTRONICS
9419 E US HWY 175,
KEMP, TX 75143

TITLE: SPLT-1.2K-400AL-ISDG-BC-R1

DRAWN BY	DATE	REV
K.NGUYEN	03/14/2022	A
CHECKED BY	SHEET #	DRAWING #
A.CIBISOVS	6 OF 6	106