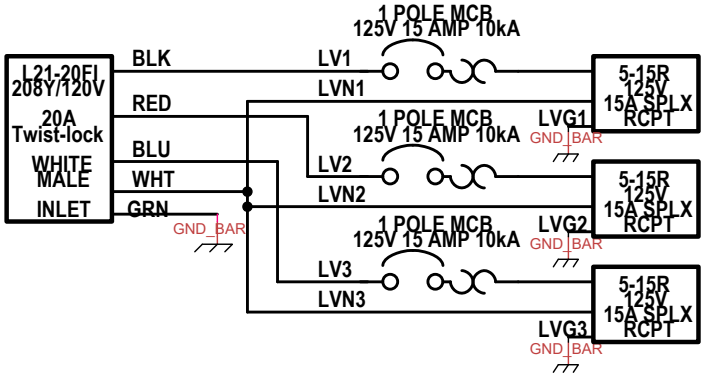

WIRE LEGEND

ID	TYPE	DESCRIPTION	WIRE SIZE
LV1	CABLE	600V THHN BLACK	#12 AWG cu
LV2	CABLE	600V THHN RED	#12 AWG cu
LV3	CABLE	600V THHN BLUE	#12 AWG cu
LVG1	CABLE	600V THHN GREEN	#12 AWG cu
LVG2	CABLE	600V THHN GREEN	#12 AWG cu
LVG3	CABLE	600V THHN GREEN	#12 AWG cu
LVN1	CABLE	600V THHN WHITE	#12 AWG cu
LVN2	CABLE	600V THHN WHITE	#12 AWG cu
LVN3	CABLE	600V THHN WHITE	#12 AWG cu

Title: MPD-CS2-NTL.20AB-YT0-Z-3.N03-M1		
Author: David Downs		
File: 0V 20A 3PH MLO 3x5-15R SPLX Inlet=L21-20FI.		Document
Revision: 1.0	Date: 10/29/2021	Sheets: 1 of 1