REV	DESCRIPTION	DATE
A	PRODUCTION RELEASE	2/21/2024

EPL-SBDL-V2-50RT-24-1227-125B-56K

LARSON ELECTRONICS®

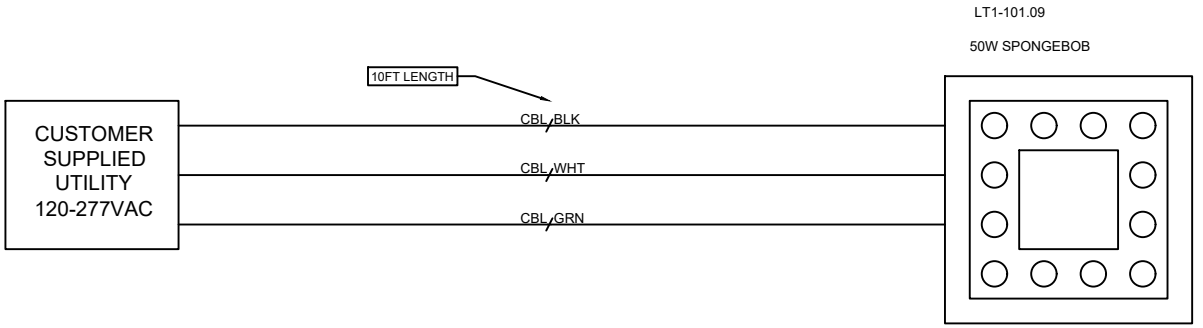

TAGS	QTY	CATALOG	DESCRIPTION
LT1-101.09	1	UNV00015748	120-277VAC 50W MII SB EXPLOSION PROOF LIGHT 5000K 125D ANGLE

LARSON ELECTRONICS
9419 E US HWY 175,
KEMP, TX 75143

TITLE: EPL-SBDL-V2-50RT-24-1227-125B-56K

DRAWN BY	DATE	REV
S.Desai	2/21/2024	A
CHECKED BY	SHEET #	DRAWING #
J.Maldonado	1 OF 1	101