REV	DESCRIPTION	DATE
A	PRODUCTION RELEASE	9/29/2021

SPLT-.9K-LM30-WG.04-4X100LTL-AT-BC-M1

LARSON ELECTRONICS®

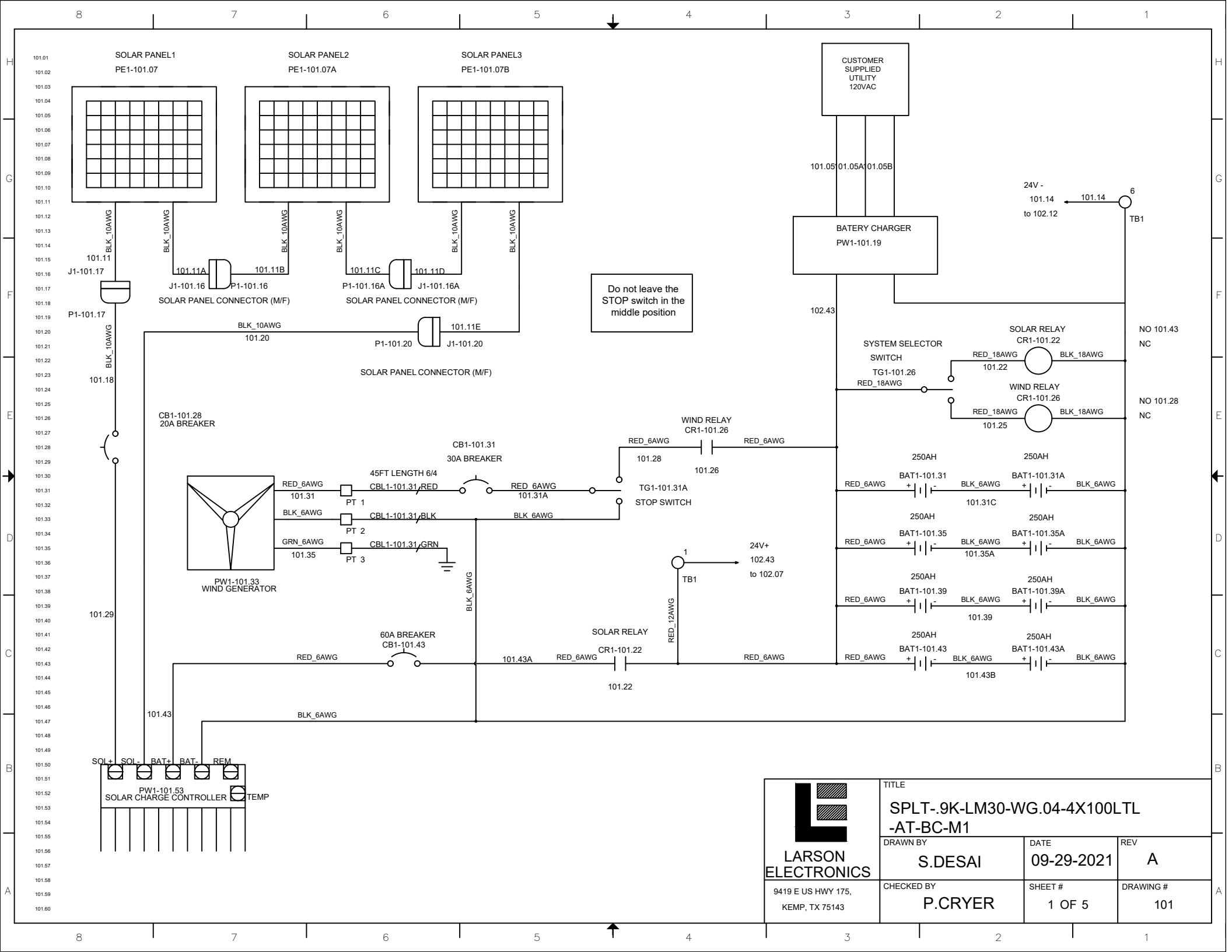

LARSON ELECTRONICS
9419 E US HWY 175,
KEMP, TX 75143

TITLE			
SPLT-.9K-LM30-WG.04-4X100LTL -AT-BC-M1			
DRAWN BY	DATE	REV	
S.DESAI	09-29-2021	A	
CHECKED BY	SHEET #	DRAWING #	
P.CRYER	1 OF 5	101	

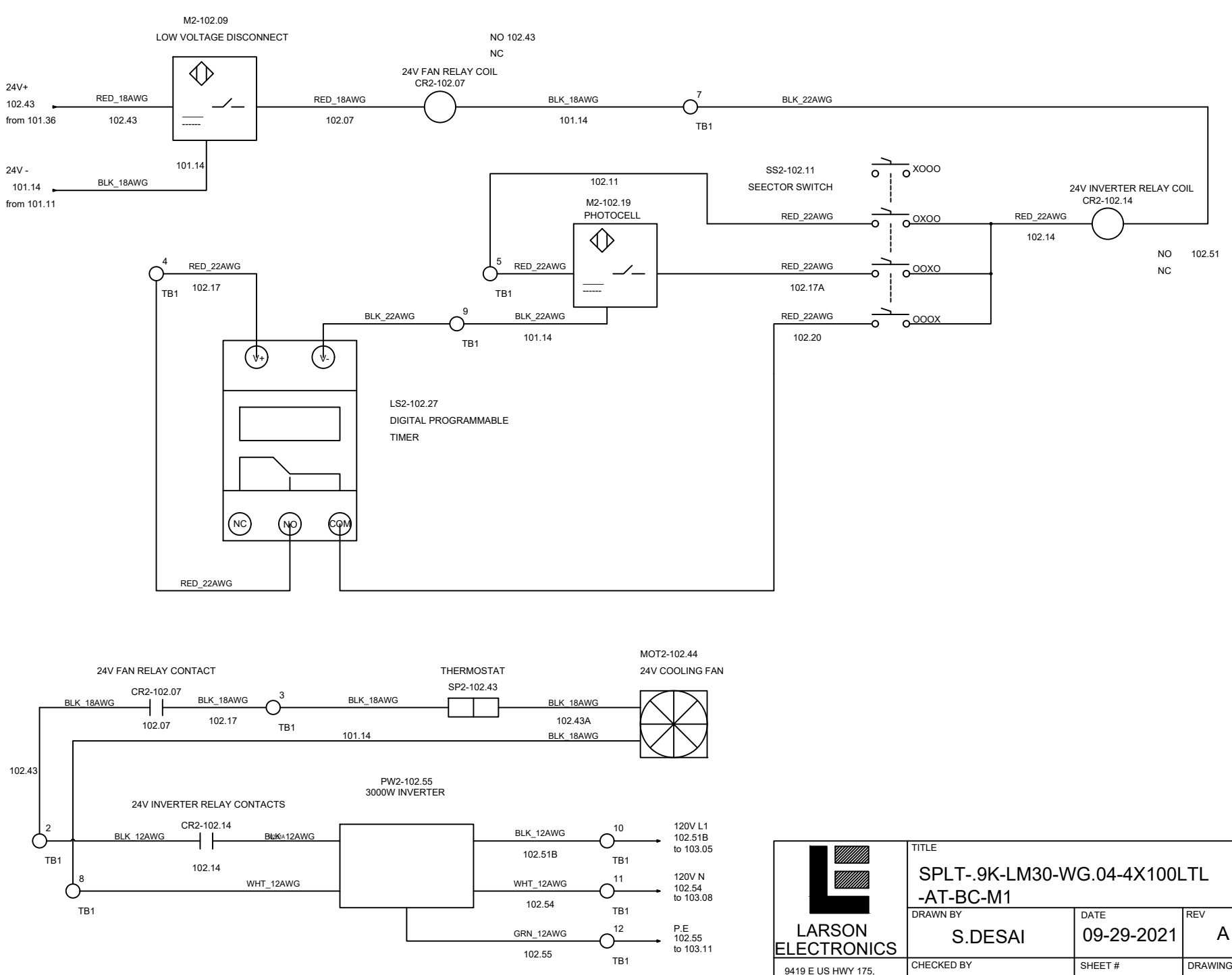

LARSON ELECTRONICS
9419 E US HWY 175,
KEMP, TX 75143

TITLE			
SPLT-.9K-LM30-WG.04-4X100LTL -AT-BC-M1			
DRAWN BY	DATE	REV	
S.DESAI	09-29-2021	A	
CHECKED BY	SHEET #	DRAWING #	
P.CRYER	2 OF 5	102	

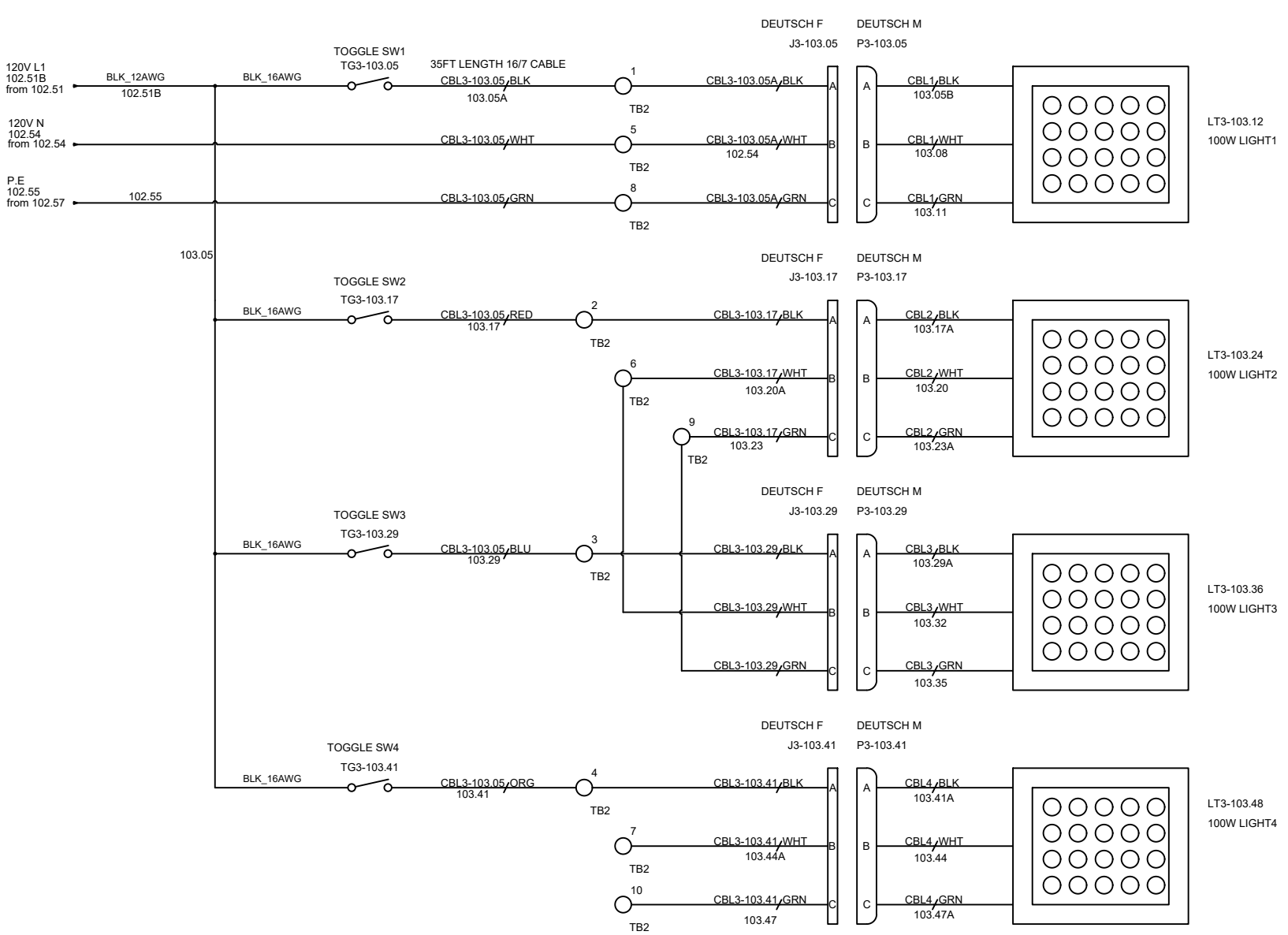

LARSON ELECTRONICS
9419 E US HWY 175,
KEMP, TX 75143

TITLE			
SPLT-.9K-LM30-WG.04-4X100LTL -AT-BC-M1			
DRAWN BY	DATE	REV	
S.DESAI	09-29-2021	A	
CHECKED BY	SHEET #	DRAWING #	
P.CRYER	3 OF 5	103	

TB1							
Device1	Wire1	Type1	Number	Type2	Wire2	Device2	Jumper
M2-102.09	102.43	RED_18AWG	1	RED_6AWG	102.43	CB1-101.43	
CR2-102.07	102.43	BLK_18AWG	2	BLK_18AWG	102.43	CR2-102.14	
CR2-102.07	102.17	BLK_18AWG	3	BLK_18AWG	102.17	SP2-102.43	
LS2-102.27	102.17	RED_22AWG	4	RED_22AWG	102.17	LS2-102.27	
SS2-102.14	102.11	RED_22AWG	5	RED_22AWG	102.11	M2-102.19	
M2-102.09	101.14	BLK_18AWG	6	BLK_6AWG	101.14	PW1-101.19	
CR2-102.07	101.14	BLK_18AWG	7	BLK_22AWG	101.14	CR2-102.14	
MOT2-102.44	101.14	BLK_18AWG	8	WHT_12AWG	101.14	PW2-102.55	
M2-102.19	101.14	BLK_22AWG	9	BLK_22AWG	101.14	LS2-102.27	
PW2-102.55	102.51A	BLK_12AWG	10	BLK_12AWG	102.51A		
PW2-102.55	102.54	WHT_12AWG	11	WIRES	102.54	TB2	
PW2-102.55	102.55	GRN_12AWG	12	WIRES	102.55	TB2	

TB2							
Device1	Wire1	Type1	Number	Type2	Wire2	Device2	Jumper
TG3-103.05	103.05A	WIRES	1	BLK_16AWG	103.05A	J3-103.05	
TG3-103.17	103.17	WIRES	2	BLK_16AWG	103.17	J3-103.17	
TG3-103.29	103.29	WIRES	3	BLK_16AWG	103.29	J3-103.29	
TG3-103.41	103.41	WIRES	4	BLK_16AWG	103.41	J3-103.41	
TB1	102.54	WIRES	5	WHT_16AWG	102.54	J3-103.05	
J3-103.17	103.20A	WHT_16AWG	6	WHT_16AWG	103.20A	J3-103.29	
J3-103.41	103.44A	WHT_16AWG	7				
TB1	102.55	WIRES	8	GRN_16AWG	102.55	J3-103.05	
J3-103.17	103.23	GRN_16AWG	9	GRN_16AWG	103.23	J3-103.29	
J3-103.41	103.47	GRN_16AWG	10				

LARSON ELECTRONICS
9419 E US HWY 175,
KEMP, TX 75143

TITLE
SPLT-.9K-LM30-WG.04-4X100LTL
-AT-BC-M1

DRAWN BY	DATE	REV
S.DESAI	09-29-2021	A
CHECKED BY	SHEET #	DRAWING #
P.CRYER	4 OF 5	104

TAGS	QTY	CATALOG	DESCRIPTION
BAT1-101.31 BAT1-101.31A BAT1-101.35 BAT1-101.35A BAT1-101.39 BAT1-101.39A BAT1-101.43 BAT1-101.43A	8	UNV00009854	250AH 12 V SLA BATTERY
P1-101.16 P1-101.16A P1-101.17 P1-101.20	4	UNV00001349	SOLAR PANEL CONNECTOR -MALE
J1-101.16 J1-101.16A J1-101.17 J1-101.20	4	UNV00001350	SOLAR CONNECTOR- FEMALE
J3-103.05 J3-103.17 J3-103.29 J3-103.41	4	UNV00005477	DT 3WAY RECEPTACAL
P3-103.05 P3-103.17 P3-103.29 P3-103.41	4	UNV00005493	DT PLUG WEDGE LOCK 3 WAY
CB1-101.28	1	UNV00001347	DIN RAIL MOUNT 150V DC 20A BREAKER
CB1-101.43	1	UNV00001791	MRCB 60A 12-48V BREAKER
CB1-101.31	1		MRCB 30A 12-48V DC BREAKER
CR2-102.07 CR2-102.14	2	UNV00013952	30A 24V 2NO CONTACT RELAY
CR1-101.22 CR1-101.26	2		24V 60A AUTOMOTIVE RELAY
M2-102.09	1	UNV00012065	Low Voltage Disconnect Module LVD, 24V 30A, Protect/Prolong Battery Life
LT3-103.12 LT3-103.24 LT3-103.36 LT3-103.48	4	UNV00008017	100W 120-277V STADIUM LED LIGHTS

TAGS	QTY	CATALOG	DESCRIPTION
MOT2-102.44	1	UNV00011964	24V DC 12" FAN
M2-102.19	1	UINV00006500	24V PHOTOCELL 10 A
PW1-101.19	1		25A 120-240V MULTI VOLTAGE BATTERY CHARGER
PE1-101.07 PE1-101.07A PE1-101.07B	3	UNV00005453	SOLAR PANEL-300W
PW1-101.53	1	UNV00006003	TRISTAR MPPT SOLAR CHARGE CONTROLLER 60 AMP UP TO 150 VOC INPUT, 12-48 VOLTS. 12V-800 WATTS 24V-1600 WATTS 48V-3200 WATTS
PW2-102.55	1	UNV00006697	3000W SOLAR POWER INVERTER OFF GRID 24V DC VOLTAGE CONVERTER LED DISPLAY PURE SINE WAVE DUAL 120V AC OUTLETS
PW1-101.33	1		WIND GENERATOR 400W-48V
SS2-102.11	1	UNV00015512	4 POSITION MAINTAINED SELECTOR SWITCH 2 NO 2NC
LS2-102.27	1	UNV00012653	DIGITAL TIME SWITCH PROGRAMMABLE
TG1-101.26	1	UNV00001906	TOGGLE SWITCH SPDT
TG1-101.31A	1		STOP SWITCH KIT FOR WIND POWER SYSTEM
TG3-103.05 TG3-103.17 TG3-103.29 TG3-103.41	4	UNV00014856	TOGGLE SWITCH 10A
PT	3	UNV00008886	2 HOLE 14/4 AWG POLARIS CONNECTOR
TB1 TB2	8	UNV00013970	FEED THROUGH 2 POINT TERMINAL BLOCK-BLUE SCREWLESS
TB1 TB2	10	UNV00013971	FEED THROUGH 2 POINT TERMINAL BLOCK-GREY SCREWLESS
TB1	1	UNV00013972	TERMINAL BLOCK JUMPER 2 HOLE BLOCKS
TB1 TB2	3	UNV00013972	TWO HOLE TERMINAL BLOCK JUMPER
TB1 TB2	4	UNV00013989	FEED THROUGH 2 POINT TERMINAL BLOCK-GREEN SCREWLESS
SP2-102.43	1	UNV00099886	THERMOSTAT 50-120 CONTROL
CBL3-103.05	1	UNV00002853	16/7 SOOW..C-SOOW-16-7
CBL1-101.31	1	UNV00007446	6/4 SOOW CABLE
CBL3-103.05A CBL3-103.17 CBL3-103.29 CBL3-103.41	4	UNV00007524	CORD 16/3 SOOW UL 90C BLK CABLE

LARSON ELECTRONICS
9419 E US HWY 175,
KEMP, TX 75143

TITLE
SPLT-.9K-LM30-WG.04-4X100LTL -AT-BC-M1

DRAWN BY	DATE	REV
S.DESAI	09-29-2021	A
CHECKED BY	SHEET #	DRAWING #
P.CRYER	5 OF 5	105