REV	DESCRIPTION	DATE
A	PRODUCTION RELEASE	4/17/2024

EPL-TL-2XLE1-C-1227-STB-GR

LARSON ELECTRONICS®

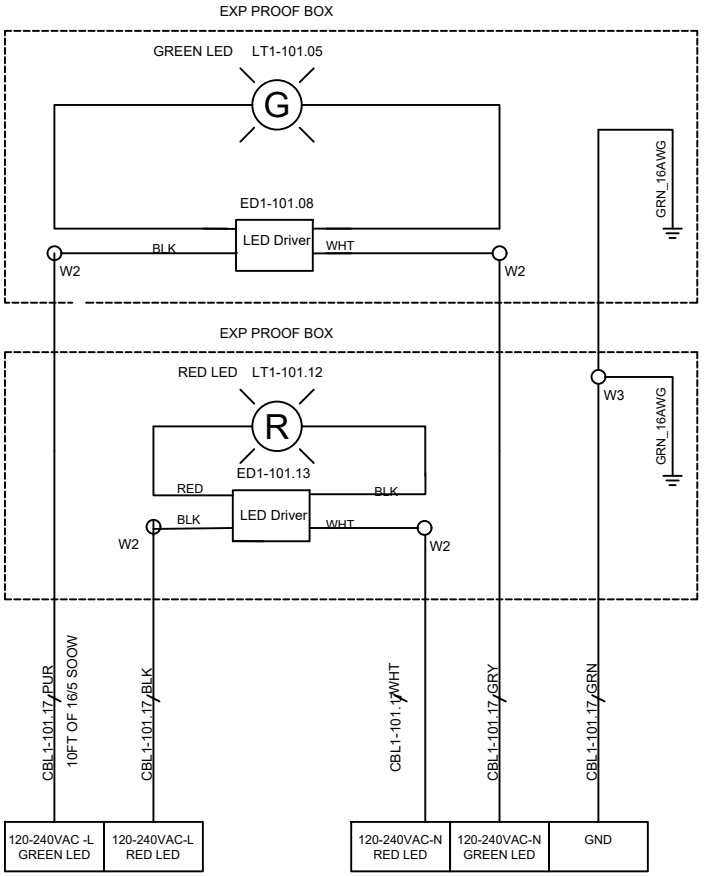

TAGS	QTY	CATALOG	DESCRIPTION
ED1-101.08 ED1-101.13	2	UNV00004244	26W LED DRIVER DIMMING 0-10..XXL-EMG-DCP-26W
LT1-101.07 LT1-101.12	2	UNV00004101	25W 9-32V SPOT LIGHT
W3	1	UNV00011954	3 HOLE WAGO
CBL1-101.17	10FT	UNV00005745	16/5 SOOW CABLE
W2	4	UNV00004254	2 HOLE WAGO

LARSON ELECTRONICS

9419 E US HWY 175,
KEMP, TX 75143

TITLE			
EPL-TL-2XLE1-C-1227-STB-GR			
DRAWN BY	DATE	REV	
A.HIRSH	4/17/2024	A	
CHECKED BY	SHEET #	DRAWING #	
J.Maldonado	1 OF 1	101	