REV	DESCRIPTION	DATE
A	PRODUCTION RELEASE	5/19/2025

EPSLED-MJ-25W-LED-C-1224-WLM-45K

LARSON ELECTRONICS®

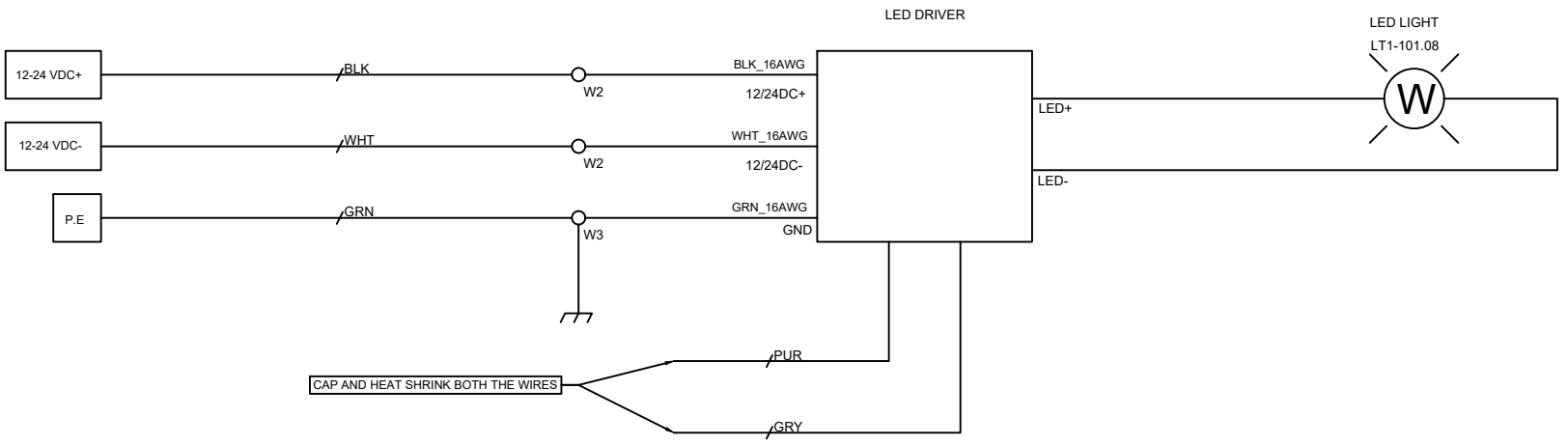

TAGS	QTY	CATALOG	DESCRIPTION
LT1-101.08	1	UNV00016875	Mason jar light 25w 12-24v AMBER
W2	2	UNV00009802	2-Conductor Lever Clamp Wago
W3	1	UNV00011954	3 HOLE WAGO

LARSON ELECTRONICS

9419 E US HWY 175,
KEMP, TX 75143

TITLE: EPSLED-MJ-25W-LED-C-1224-WLM-45K

DRAWN BY	DATE	REV
S.DESAI	5/19/2025	A
CHECKED BY	SHEET #	DRAWING #
	1 OF 1	101