REV	DESCRIPTION	DATE
A	PRODUCTION RELEASE	09/23/2022

SPLT-SMJB-0.3K-LP16
-4XWP60-AT-MS-BC-M2

LARSON ELECTRONICS®

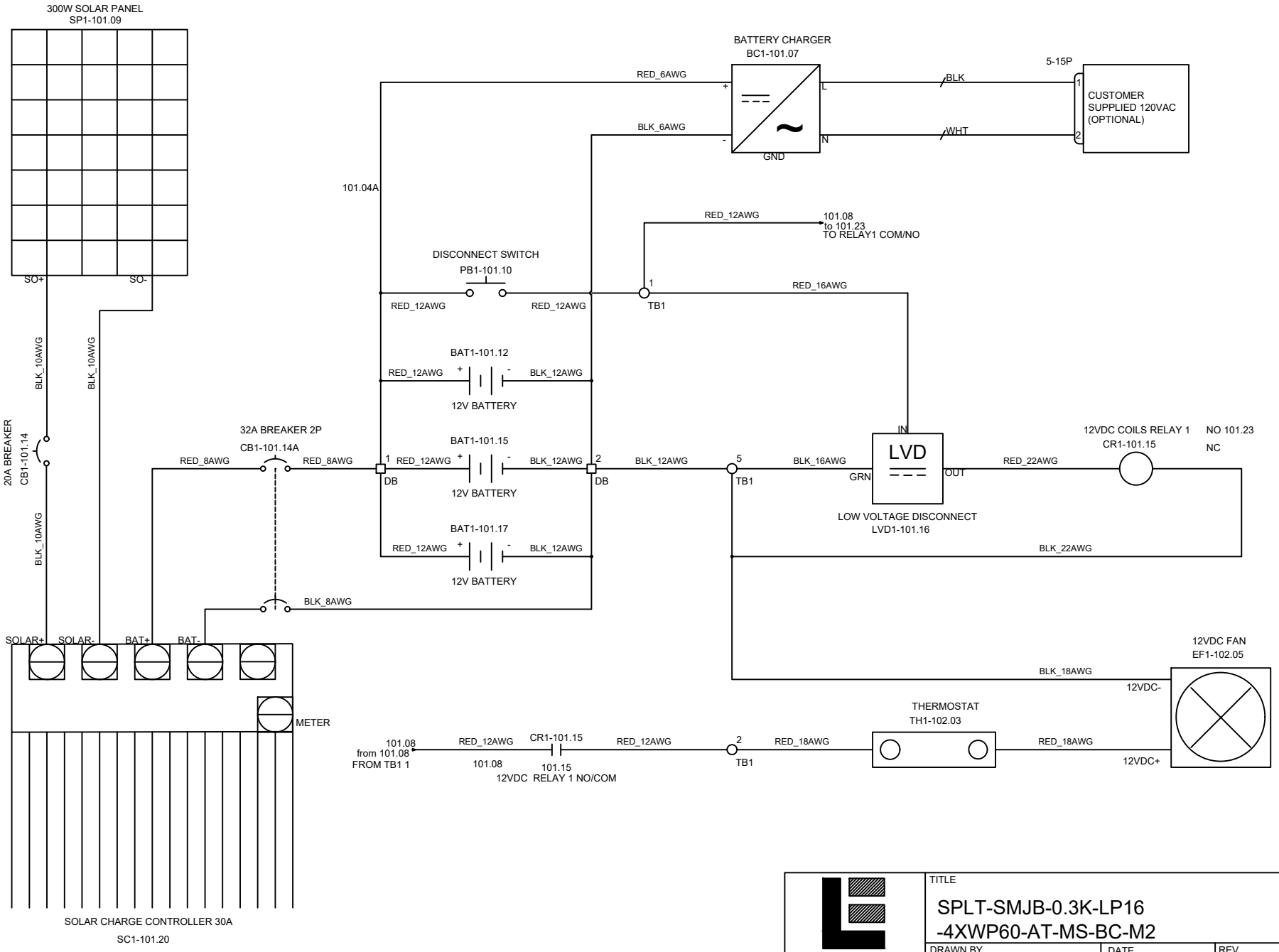

LARSON ELECTRONICS 9419 E US HWY 175, KEMP, TX 75143	TITLE SPLT-SMJB-0.3K-LP16 -4XWP60-AT-MS-BC-M2		
	DRAWN BY K.NGUYEN	DATE 09/23/2022	REV A
	CHECKED BY S.DESAI	SHEET # 1 OF 4	DRAWING # 101

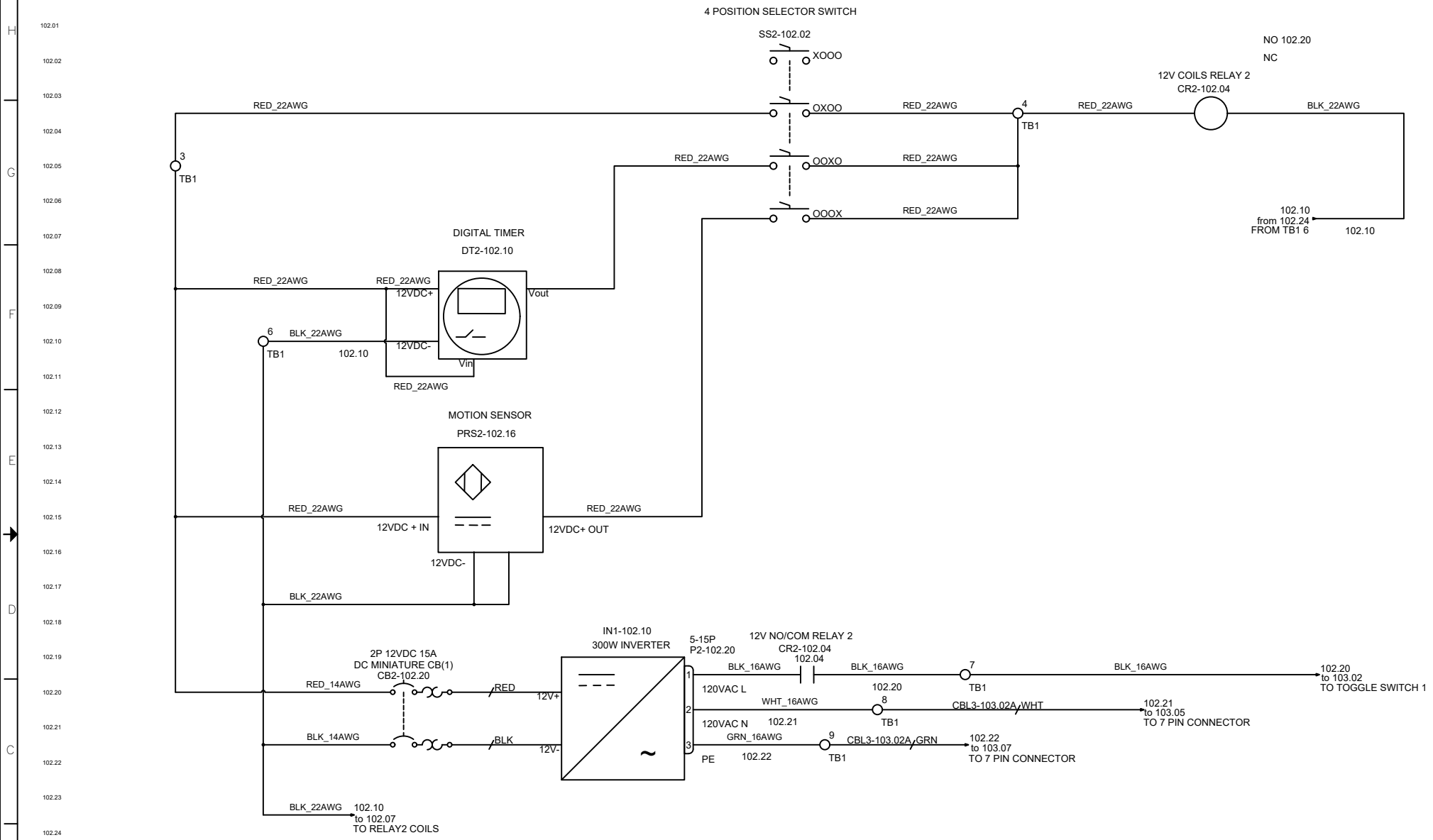

LARSON ELECTRONICS

9419 E US HWY 175,
KEMP, TX 75143

TITLE			
SPLT-SMJB-0.3K-LP16 -4XWP60-AT-MS-BC-M2			
DRAWN BY	DATE	REV	
K.NGUYEN	09/23/2022	A	
CHECKED BY	SHEET #	DRAWING #	
S.DESAI	2 OF 4	102	

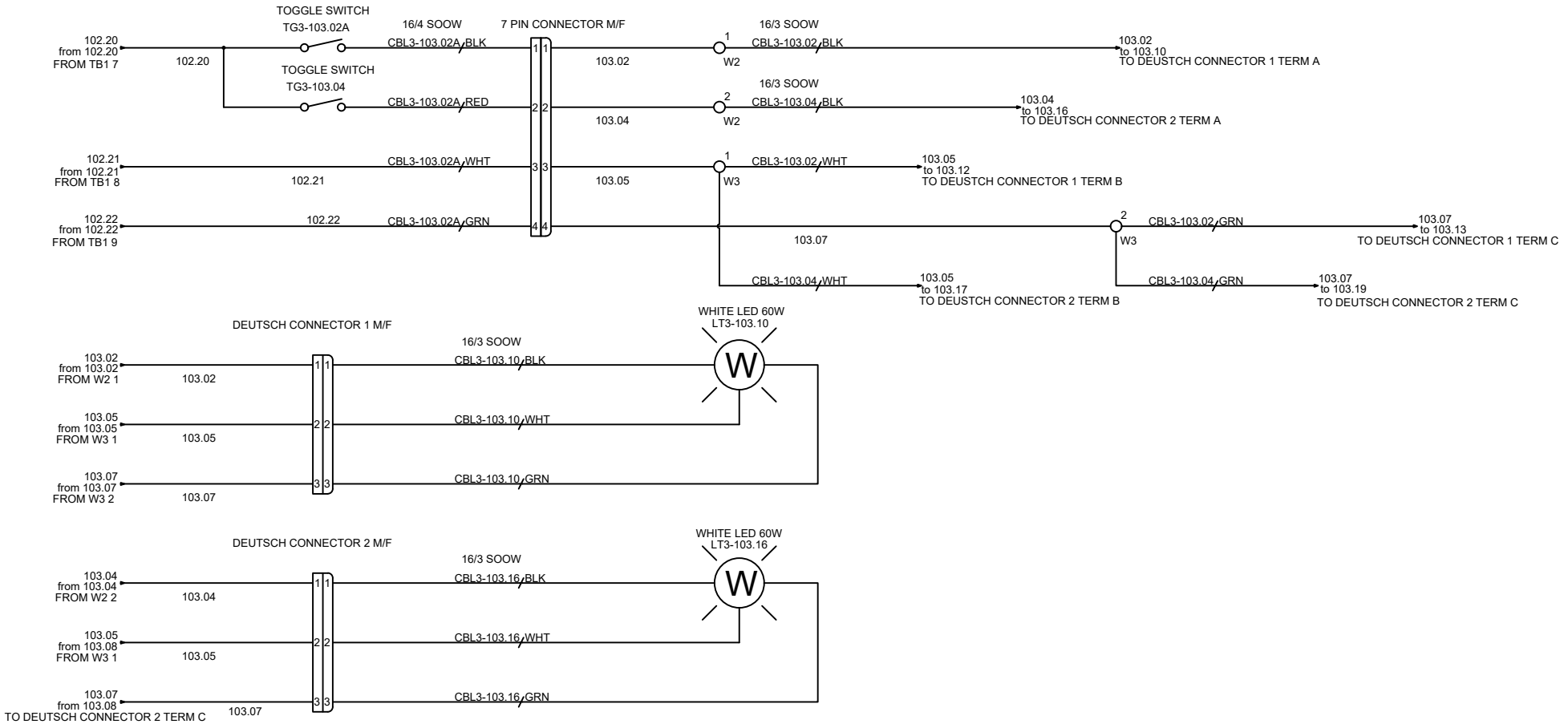

LARSON ELECTRONICS 9419 E US HWY 175, KEMP, TX 75143	TITLE: SPLT-SMJB-0.3K-LP16 -4XWP60-AT-MS-BC-M2		
	DRAWN BY: K.NGUYEN	DATE: 09/23/2022	REV: A
	CHECKED BY: S.DESAI	SHEET #: 3 OF 4	DRAWING #: 103

TB3													
Device1	Pin1	Wire1	Type1	T1	Number	T2	Manufacturer	Catalog	Type2	Wire2	Pin2	Device2	Jumper
BAT1-101.12	+	101.04	RED_6AWG		1		PHOENIX CONTACT	UNV00013974	RED_6AWG	101.04	+	BC1-101.07	
CR1-101.15		101.04	RED_12AWG						RED_16AWG	101.04	IN	LVD1-101.16	
CR1-101.15			RED_12AWG		2		PHOENIX CONTACT	UNV00013974	RED_18AWG			1-102.03	
			RED_20AWG		3		PHOENIX CONTACT	UNV00013974	RED_20AWG		12VDC+	DT2-102.10	
			RED_20AWG		4		PHOENIX CONTACT	UNV00013974	RED_20AWG			CR2-102.04	
			RED_20AWG										
DB	2		BLK_12AWG		5		PHOENIX CONTACT	UNV00013975	BLK_16AWG		GRN	LVD1-101.16	
EF1-102.05	12VDC+		BLK_18AWG						BLK_18AWG			CR1-101.15	
MS2-102.16	12VDC- IN	102.10	BLK_20AWG		6		PHOENIX CONTACT	UNV00013975	BLK_20AWG	102.10	12VDC-	DT2-102.10	
CR2-102.04		102.20	BLK_16AWG		7		PHOENIX CONTACT	UNV00013974	BLK_16AWG	102.20		TG3-103.02A	
P2-102.20	2	102.21	WHT_16AWG		8		PHOENIX CONTACT	UNV00013975	WIRES	102.21	3		
P2-102.20	3	102.22	GRN_16AWG		9		PHOENIX CONTACT	UNV00013989	WIRES	102.22	4		

TAGS	QTY	CATALOG	DESCRIPTION
BAT1-101.12 BAT1-101.15 BAT1-101.17	3	UNV00011977	40AH BATTERY 12VDC LITHIUM
	1	UNV00002324	7 PIN CONNECTOR- RECEPTACLE
	1	UNV00002338	7 PIN CONNECTOR PLUG
P2-102.20	1	UNV00006731	Plug, Straight Blade, 15A, 125V NEMA 5-15
CB2-102.20	1	65Z60-2P12B-15	2P 15A 12-110VDC MINIATURE CB
CB1-101.14A	1	65Z60-2P12B-32A	2P DC BREAKER 12-110VDC 32A
CB1-101.14	1	UNV00015144	DIN RAIL BREAKER 20A 1P 277V
CR1-101.15 CR2-102.04	2	UNV00014877	ICE CUBE CONTROL RELAY 12VDC COIL VOLTAGE
EF1-102.05	1	UNV00015879	12VDC ELECTRIC COOLING FAN 1400CFM
DT2-102.10	1	UNV00015878	12VDC DIGITAL TIMER
SP1-101.09	1	UNV00005453	300W SOLAR PANEL
IN1-102.10	1	UNV00012111	300W INVERTER 12VDC-120VAC
BC1-101.07	1	UNV00014437	12V 55AMP CHARGER CONVERTER POWER SUPPLY
SC1-101.20	1	Keeper1230	30A MPPT SOLAR CHARGER
1-102.03	1	UNV00009886	THERMOSTAT
LVD1-101.16	1	UNV00014411	LVD MODULE 12V
LT3-103.10 LT3-103.16	2	UNV00008125	60W 120/227VAC 5600K LED
PB1-101.10	1	UNV00014267	DISCONNECT SWITCH 300A
SS2-102.02	1	UNV00015512	SELECTOR SWITCH MAINTAINED 4P
TG3-103.02A TG3-103.04	2	UNV00014856	ON-OFF TOGGLE SWITCH
DB	2	UNV00015084	POWER DISTRIBUTION BLOCK 175A 600V
TB1	5	UNV00013974	4 HOLE GREY TB
TB1	3	UNV00013975	4 HOLE BLUE TB
TB1	1	UNV00013976	RED JUMPER FOR 2 HOLE TERM BLOCK
TB1	1	UNV00013989	2 HOLE GREEN TB
W3	2	UNV00011954	3 HOLE WAGO
W2	2	UNV00009802	2 HOLES WAGO
CBL3-103.02A	1	UNV00007443	CORD 16/4 SOOW UL 90C BLK
CBL3-103.02 CBL3-103.04 CBL3-103.10 CBL3-103.16	4	UNV00007524	CORD 16/3 SOOW UL 90C BLK CABLE

LARSON ELECTRONICS
9419 E US HWY 175,
KEMP, TX 75143

TITLE: SPLT-SMJB-0.3K-LP16 -4XWP60-AT-MS-BC-M2

DRAWN BY	DATE	REV
K.NGUYEN	09/23/2022	A
CHECKED BY	SHEET #	DRAWING #
S.DESAI	4 OF 4	104