REV	DESCRIPTION	DATE
A	PRODUCTION RELEASE	4/15/2021

EPL-48-4L-LED-D-V2-100C-56K-SFC

LARSON ELECTRONICS®

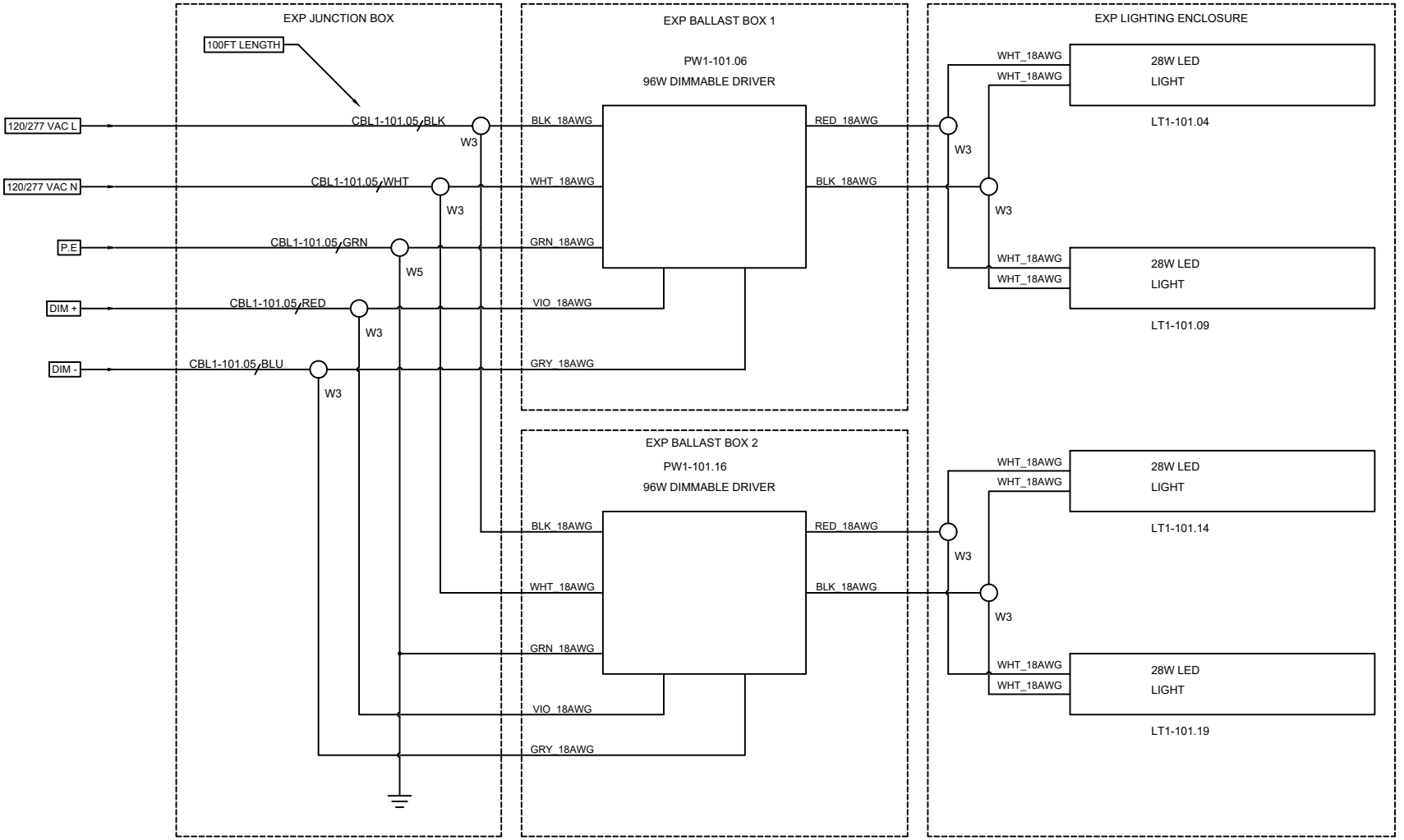

TAGS	QTY	CATALOG	DESCRIPTION
LT1-101.04 LT1-101.09 LT1-101.14 LT1-101.19	4	UNV00008109	12-24V LED T8 LIGHT 4 FT
PW1-101.06 PW1-101.16	2	UNV00004250	96W 120-277V LED DIMMABLE DRIVER
W5	1	UNV00009803	5 HOLE WAGO
W3	8	UNV00011954	3 HOLE WAGO
CBL1-101.05	100FT	UNV00007736	12/5 SEOOW CABLE

LARSON ELECTRONICS
9419 E US HWY 175,
KEMP, TX 75143

TITLE: EPL-48-4L-LED-D-V2-100C-56K-SFC

DRAWN BY	DATE	REV
S.DESAI	04-15-2021	A
CHECKED BY	SHEET #	DRAWING #
P.CRYER	1 OF 1	101