REV	DESCRIPTION	DATE
A	PRODUCTION RELEASE	05/18/2021

EPF-SM-24-SW-1523

LARSON ELECTRONICS®

CLOCKWISE WIRING DIAGRAM

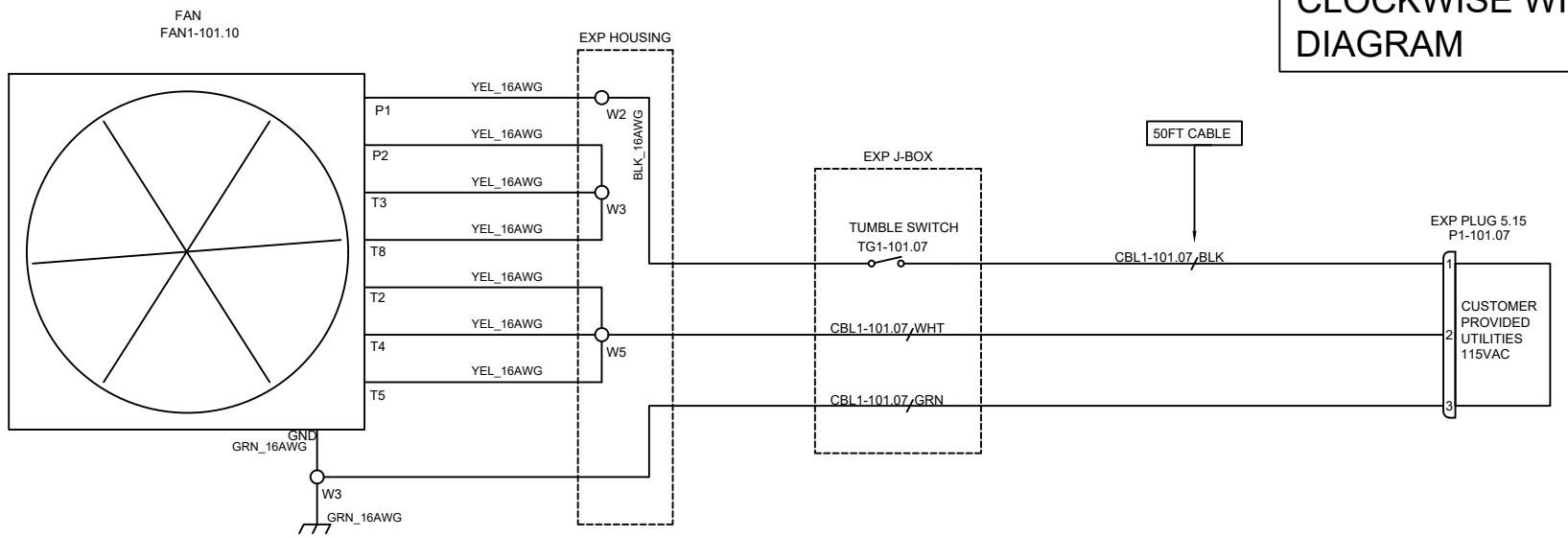

TAGS	QTY	CATALOG	DESCRIPTION
P1-101.07	1	UNV00005389	Explosion Proof Plug - 5-15P 15 Amp - 125V - Quick Wiring / Large Screws
FAN1-101.10	1	UNV00006468	7980CFM FAN CIRCULATION 24" C1D1 115VAC/ 208-230VAC
TG1-101.07	1	UNV00005436	EXP TUMBLE SWITCH 20A 1P
W5	1	UNV00009803	5 HOLES WAGO
W3	2	UNV00011954	3 HOLE WAGO
W2	1	UNV00009802	2 HOLES WAGO
CBL1-101.07	1	UNV00007524	CORD 16/3 SOOW UL 90C BLK CABLE

LARSON ELECTRONICS
9419 E US HWY 175,
KEMP, TX 75143

TITLE			
EPF-SM-24-SW-1523			
DRAWN BY	DATE	REV	
K.NGUYEN	05/18/2021	A	
CHECKED BY	SHEET #	DRAWING #	
R.BLACK	1 OF 1	101	