REV	DESCRIPTION	DATE
A	PRODUCTION RELEASE	02/08/2021

IND-HVAC-ACS-R1-DP-30-2L-XB

LARSON ELECTRONICS®

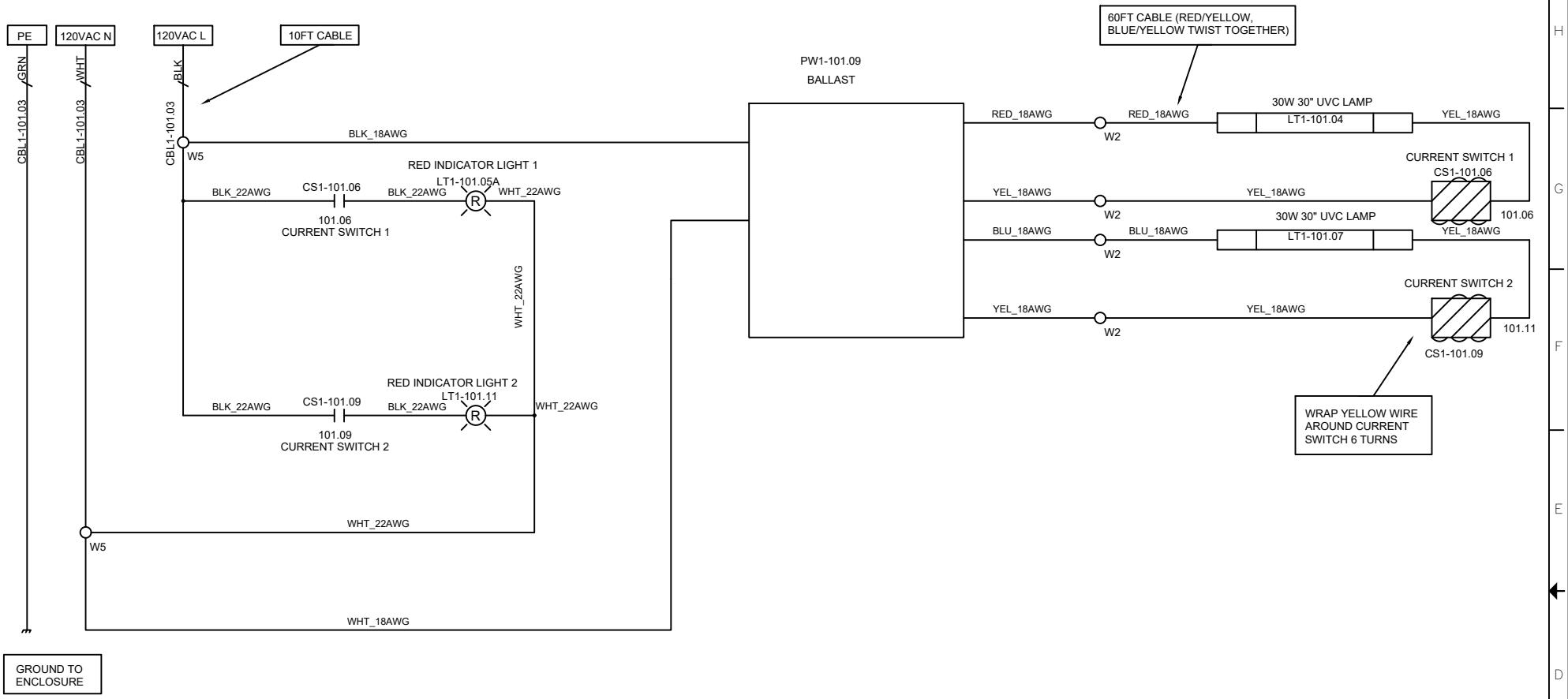

TAGS	QTY	CATALOG	DESCRIPTION
CS1-101.06 CS1-101.09	2	UNV00015374	120VAC CURRENT SWITCH
LT1-101.04 LT1-101.07	2	N/A	30W 30" UVC LAMP
LT1-101.05A LT1-101.11	2	UNV00015469	RED INDICATOR LIGHT 120V
PW1-101.09	1	UNV00006837	40W BALLAST 120VAC 4 LAMPS
W5	2	UNV00009803	5 HOLES WAGO
W2	4	UNV00009802	2 HOLES WAGO
CBL1-101.03	1	UNV00007524	CORD 16/3 SOOW UL 90C BLK CABLE

LARSON ELECTRONICS
9419 E US HWY 175,
KEMP, TX 75143

TITLE			
IND-HVAC-ACS-R1-DP-30-2L-XB			
DRAWN BY	K.NGUYEN	DATE	02/08/2021
REV	A		
CHECKED BY	R.BLACK	SHEET #	1 OF 1
DRAWING #	101		