REV	DESCRIPTION	DATE
A	PRODUCTION RELEASE	08/04/2020

IND-RL-HDB-BX9-220V

LARSON ELECTRONICS®

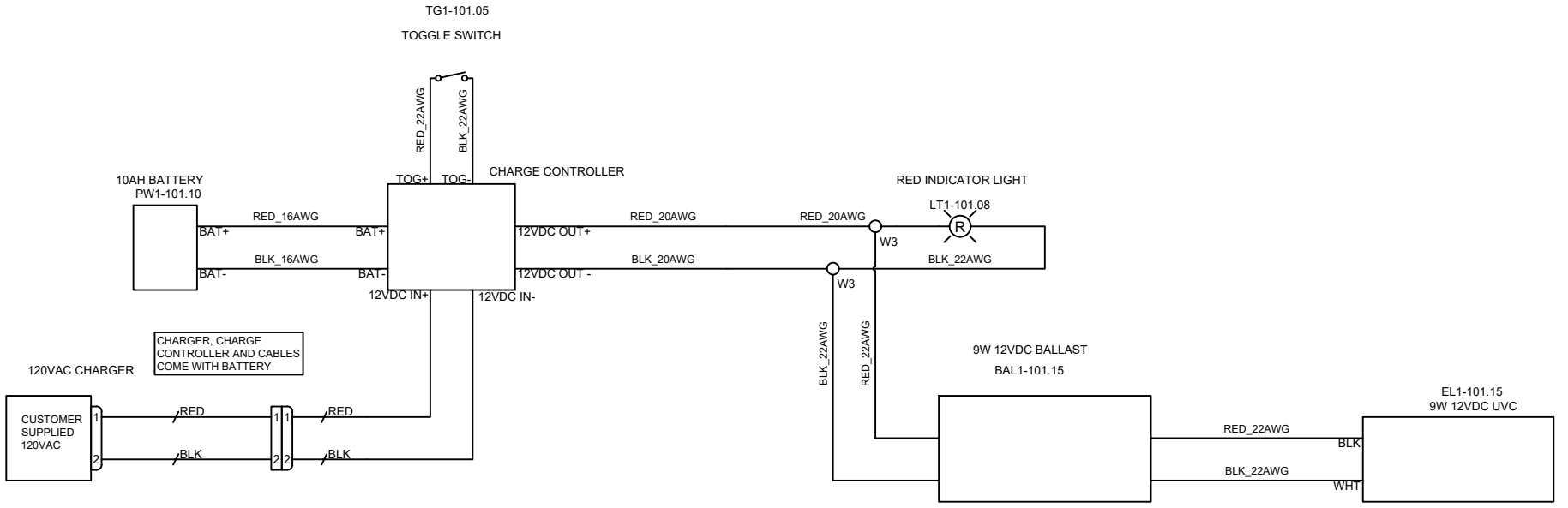

TAGS	QTY	CATALOG	DESCRIPTION
BAL1-101.15	1	N/A	9W 12VDC BALLAST
EL1-101.15	1	UNV00015272	9W G23 UVC BULB 12VDC
LT1-101.08	1	20C840	RED INDICATOR LIGHT 12VDC
PW1-101.10	1	UNV00010367	RECHARGEABLE LED 120VAC CHARGER, 12VDC BATTERY
TG1-101.08	1	UNV00014856	ON-OFF TOGGLE SWITCH
W3	2	UNV00011954	3 HOLE WAGO

LARSON ELECTRONICS
9419 E US HWY 175,
KEMP, TX 75143

TITLE: IND-RL-HDB-BX9-220V

DRAWN BY	DATE	REV
K.NGUYEN	08-04-2020	A
CHECKED BY	SHEET #	DRAWING #
P.CRYER	1 OF 1	101