REV	DESCRIPTION	DATE
A	PRODUCTION RELEASE	06/03/2021

MT-BBT-248V-220V-20A-2X5FT-6.20

LARSON ELECTRONICS®

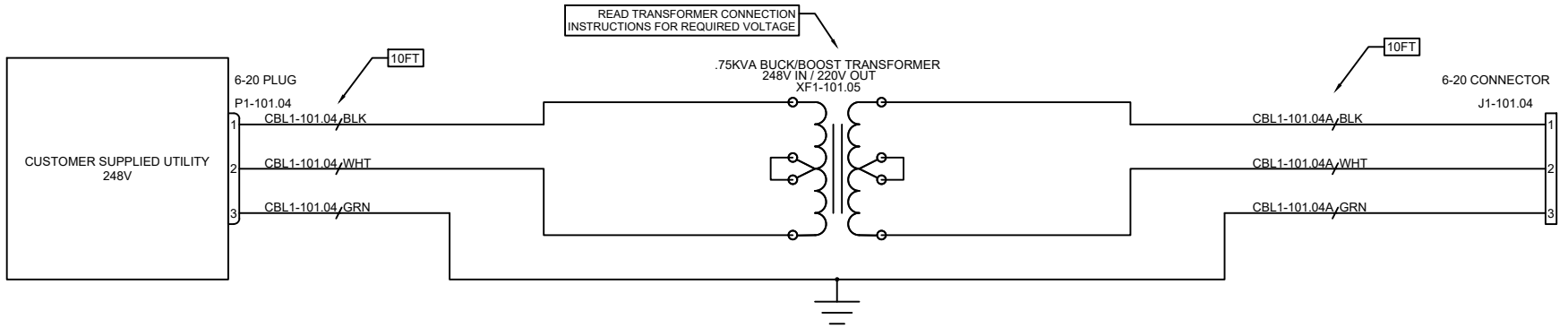

TAGS	QTY	CATALOG	DESCRIPTION
J1-101.04	1	UNV00004150	6-20C CONNECTOR
P1-101.04	1	UNV00002754	6-20P PLUG
CBL1-101.04 CBL1-101.04A	2	UNV00002908	12/3 SOOW CABLE
XF1-101.05	1	UNV00008996	.75 KVA BUCK/BOOST TRANSFORMER

LARSON ELECTRONICS
9419 E US HWY 175,
KEMP, TX 75143

TITLE: MT-BBT-248V-220V-20A-2X5FT-6.20

DRAWN BY	DATE	REV
R.BLACK	06/03/2021	A
CHECKED BY	SHEET #	DRAWING #
S.DESAI	1 OF 1	101