REV	DESCRIPTION	DATE
A	PRODUCTION RELEASE	6/27/2022

IND-HVAC-ACS-R1-DP-12-2L-XB

LARSON ELECTRONICS®

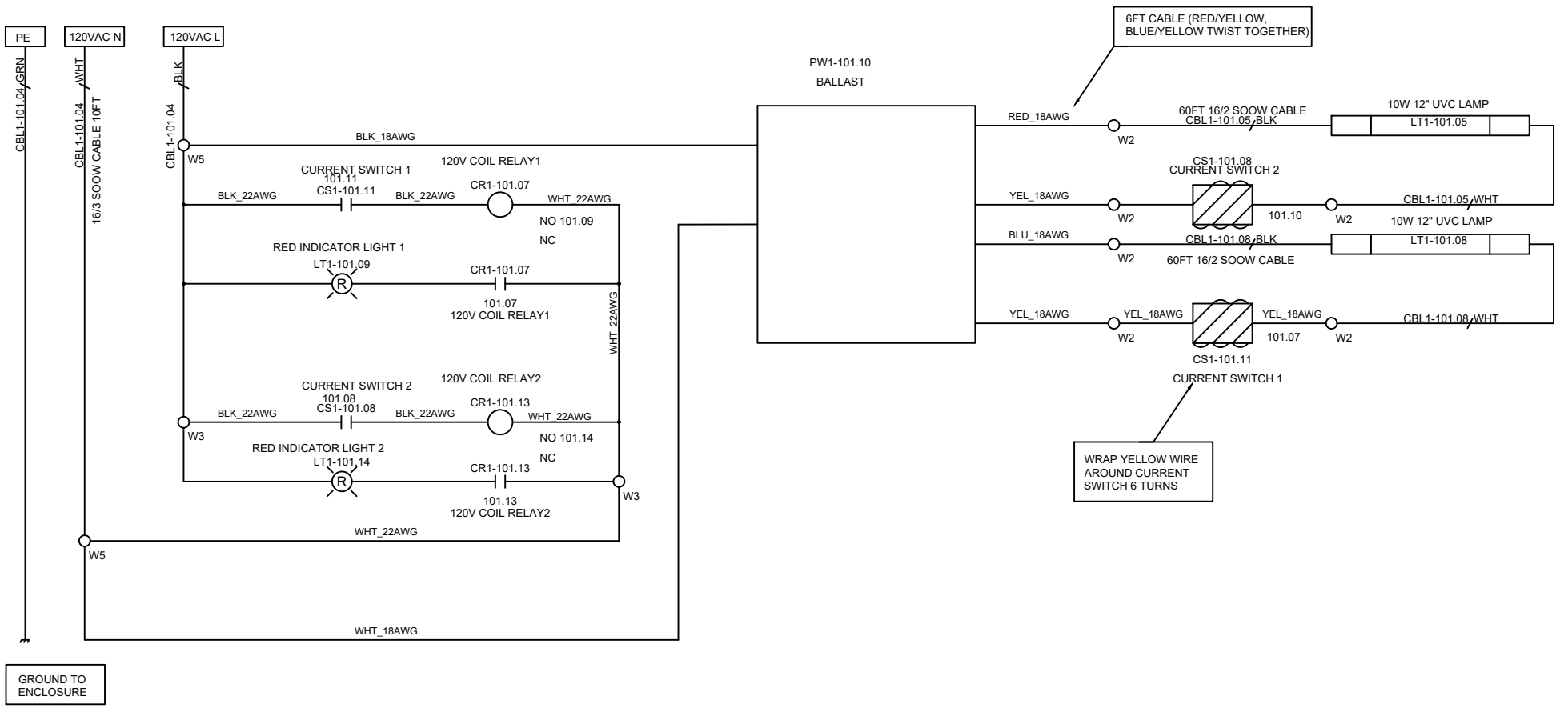

TAGS	QTY	CATALOG	DESCRIPTION
CR1-101.07 CR1-101.13	2	UNV00010791	GENERAL PURPOSE FORM C RELAY MINI POWER 30AMP
CS1-101.08 CS1-101.11	2	UNV00015374	CUREENT SWITCH TRIP POINT 0.5A
LT1-101.05 LT1-101.08	2	N/A	10W UVC T8 12iNCH BULBS
LT1-101.09 LT1-101.14	2	UNV00015469	125V RED INDICATOR LIGHT 1.5MA
PW1-101.10	1	UNV00006837	F32T8 BALLAST 4L 120-277V AC
W2	6	UNV00009802	2 HOLE WAGO
W5	2	UNV00009803	5 HOLE WAGO
W3	2	UNV00011954	3 HOLE WAGO
CBL1-101.05 CBL1-101.08	120 FT	UNV00007371	CORD 16/2 SOOW UL 90C BLK CABLE
CBL1-101.04	10FT	UNV00007524	CORD 16/3 SOOW UL 90C BLK CABLE

LARSON ELECTRONICS
9419 E US HWY 175,
KEMP, TX 75143

TITLE: IND-HVAC-ACS-R1-DP-12-2L-XB

DRAWN BY	DATE	REV
S.DESAI	6/27/2022	A
CHECKED BY	SHEET #	DRAWING #
K.NGUYEN	1 OF 1	101