REV	DESCRIPTION	DATE
A	PRODUCTION RELEASE	12-7-2020

MPD-CD1-BSB-SE15SP-EZ-1.C04-1.N20-3.N10-M1

LARSON ELECTRONICS®

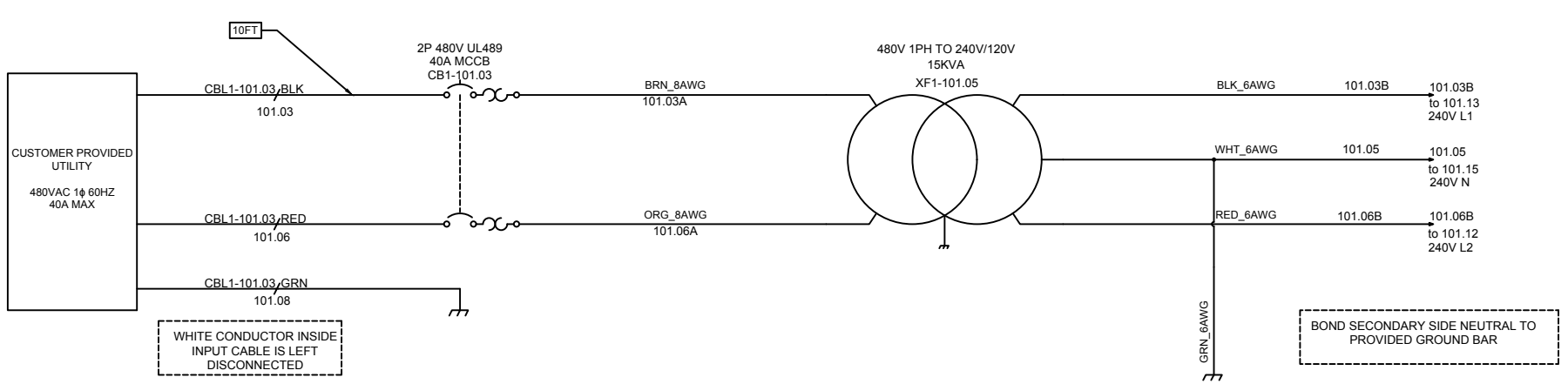

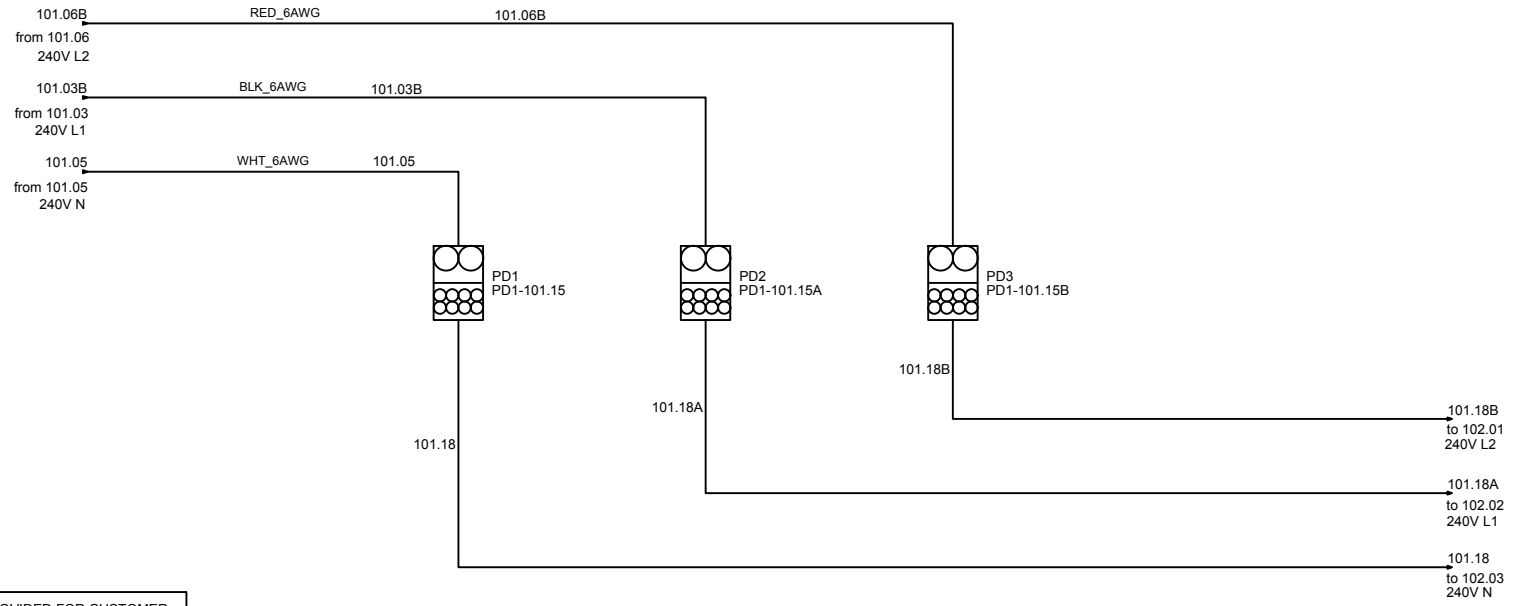

GROUND LUG PROVIDED FOR CUSTOMER
CONNECTION TO EARTH

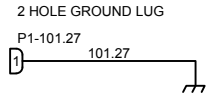

LARSON ELECTRONICS
9419 E US HWY 175,
KEMP, TX 75143

TITLE			
MPD-CD1-BSB-SE15SP-EZ-1.C04-1.N20-3.N10-M1			
DRAWN BY	DATE	REV	
P.CRYER	12-07-2020	A	
CHECKED BY	SHEET #	DRAWING #	
S.DESAI	1 OF 2	101	

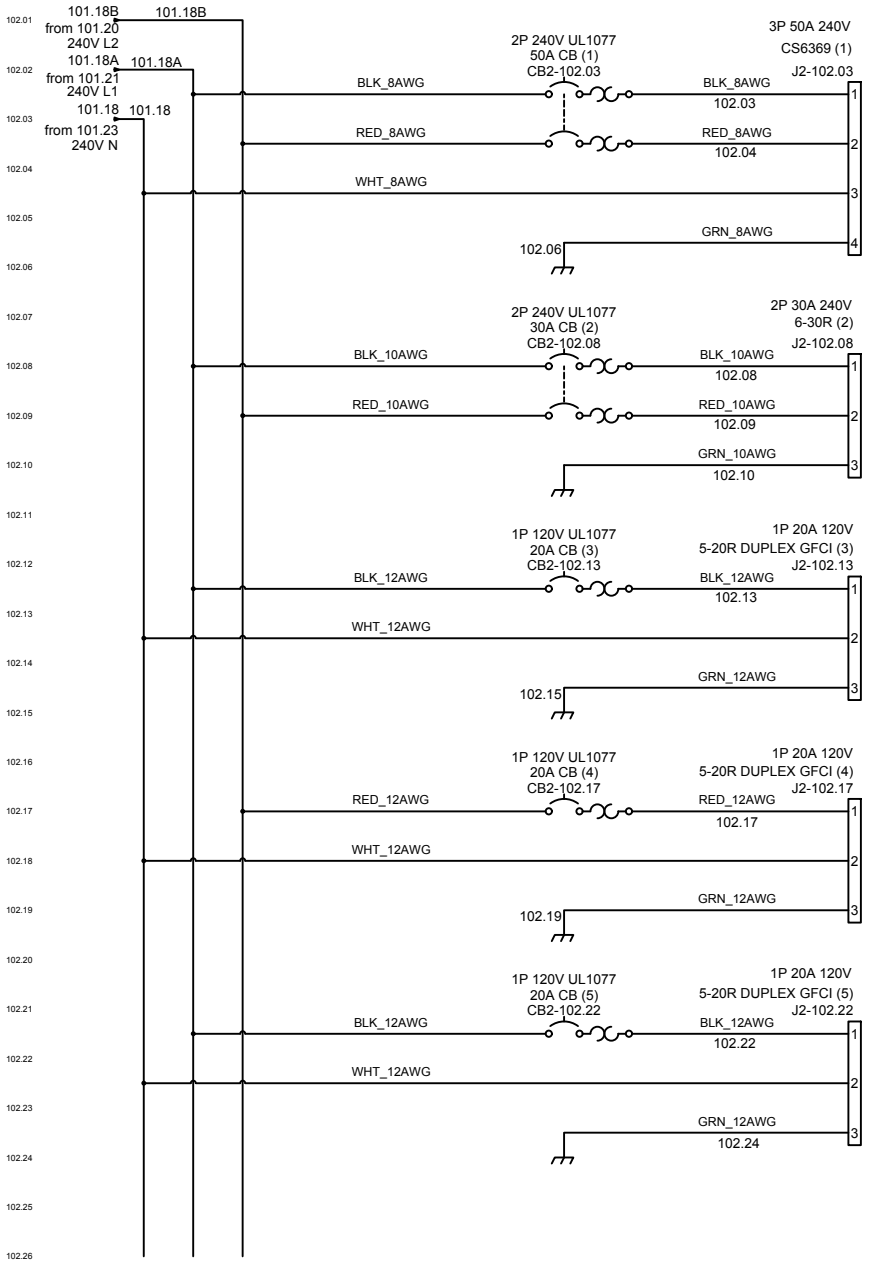

TAGS	QTY	CATALOG	DESCRIPTION
P1-101.27	1	UNV00006886	2 HOLE TERMINAL LUG - ALUMINIUM
J2-102.08	1	UNV00008766	6-30R 250V 2P3W RECEPTACLE
J2-102.03	1	UNV00008818	CS6369 - LOCKING INDUSTRIAL RECEPTACLE - 50A 125/250V - 3 POLE 4 WIRE
J2-102.13 J2-102.17 J2-102.22	3	UNV00014533	5-20R GFCI 125/250V 20A
CB2-102.13 CB2-102.17 CB2-102.22	3	UNV00015144	20A 1 POLE DIN RAIL MOUNT CIRCUIT BREAKER
CB2-102.08	1	UNV00014733	30A 2P UL1077 DIN RAIL CIRCUIT BREAKER
CB2-102.03	1	UNV00015154	2P 50A UL1077 DIN RAIL CIRCUIT BREAKER
CB1-101.03	1	UNV00015153	40A 2P UL489 MOLDED CASE CIRCUIT BREAKER
PD1-101.15 PD1-101.15A PD1-101.15B	3	UNV00015085	ENCLOSED POWER DISTRIBUTION BLOCK - 570A 1 POLE - LINE 2 300MCM TO 4AWG - LOAD 12 4AWG TO 14AWG
CBL1-101.03	1	UNV00007447	CORD 8/4 SOOW UL 90C BLK
XF1-101.05	1	UNV00001241	15KVA 1PH TRANSFORMER - 480V PRIMARY 240/120V SECONDARY

LARSON ELECTRONICS
9419 E US HWY 175,
KEMP, TX 75143

TITLE			
MPD-CD1-BSB-SE15SP-EZ-1.C04-1.N20-3.N10-M1			
DRAWN BY	DATE	REV
P.CRYER	12-07-2020	A
CHECKED BY	SHEET #	DRAWING #
S.DESAI	2 OF 2	102