SINGLE PHASE BUCK & BOOST TRANSFORMERS INSTRUCTION MANUAL

This manual applies to all single-phase buck & boost transformers sold by Larson Electronics. ***Please refer to the connection diagram on pages 4-6 for properly connecting the transformer.***

Warning: Do not attempt installation until you are familiar with all warnings, precautions, and procedures outlined within this instruction sheet. We strongly encourage only a licensed electrician install, operate and maintain this product.

Precautions:

- Do not handle this transformer without proper equipment and experienced personnel.
- Fully inspect the transformer before installation.
- Use appropriate electrical terminals with flexible connectors.
- Connections should be in accordance with nameplate drawings or attached wiring diagrams.
- Disconnect all live power before installing and maintaining the transformer.
- Do not change any connections while the transformer is energized.
- Secure all ground connections before energizing the transformer.

After receiving the transformer, immediately inspect each unit for damage that could have resulted from transit. Check to ensure the specs on the transformer match the shipping documents. A claim should be filed with the carrier if any shipping damage is noted. These details with all relevant information should also be forwarded to Larson Electronics.

Use appropriate measures and experienced personnel for transporting the transformer relative to its size. Never attempt to lift the transformer without proper equipment. Lifting tabs are included on larger transformers to help ease transportation.

All MT-BBT Buck-Boost transformers are NEMA 3R rated, suitable for both indoor and outdoor installations. Follow appropriate electrical codes for cable installation and use suitable hardware for outdoor installations, such as water tight couplings at each knockout.

The transformer must be installed in an upright position on surfaces capable of supporting its weight. If installed outdoors, orient the unit vertically with the wiring compartment down to prevent the ingress of moisture.

Mounting the Transformer (refer to page 7)

1. Choose a non-combustible surface for installing the transformer. This location must allow air flow around the transformer for cooling purposes.
2. Pre-drill the top two mounting holes on your mounting surface. (refer to mounting table on page 7)
3. With assistance, lift the transformer over the pre-drilled mounting holes and install the top two mounting bolts. Use appropriate equipment and lifting tabs for large transformers.
4. Level the unit and find the lower mounting hole(s) within the wiring compartment.
5. Drill out and install the lower mounting bolt(s) into the mounting surface.
6. In order to provide NEMA 3R protection, the unit must be mounted vertically with the mounting tabs facing up.

Ventilation

Transformers are required to maintain free air flow around the unit for cooling purposes. The location should maintain an average ambient temperature of 86°F (30°C) and should not exceed 104°F (40°C) at any time. Proper ventilation is essential for transformers to meet their kVA capability. General purpose transformers should be located at least 2 inches for 10kVA and 4 inches for units over 10kVA from the surface to maintain adequate air circulation.

Accessibility

Due to NEC standards, it is required for transformers to be accessible for inspection and located accordingly. Exposed passage ways where people could be exposed to live parts during inspection should be avoided.

Sound Levels

By nature, transformers emit sound frequencies due to their electrically energized components. Care should be exercised when selecting a location to avoid sensitive areas such as in schools, hospitals, and office facilities. The sound levels produced by these transformers are required to meet NEMA standards. The sound level can vary from 40 to 60 DB. Acoustically absorbing materials could be considered for surrounding walls and ceilings.

Wire Connections

1. Loosen the cover screw on the front to open the wiring compartment.
2. Ensure terminals are clean. Use the included lugs and bolts for terminal wiring where applicable. Use wire nuts or similar for all other electrical connections.
3. Make the required electrical connections per the wire diagram on pages 4-6. This includes input and output connections, as well as ground(s).
4. If any unused wire leads remain, insulate with a wire nut and electrical tape.
5. Inspect all connections and close the wiring compartment. Secure the cover screw.

Proper cable size is selected based on the line current rating of the transformers primary and secondary sides. Pre-punched knockouts are provided to help facilitate cable entry.

Ground

Grounding should be done in accordance with national electrical code standards. Securely grounding the transformer should be done as a safety precaution.

For safe and proper operation of the transformer, we recommend the following items be checked for completeness:

- ☐ Insulation resistance: enclosure to primary, enclosure to secondary and primary to secondary should be greater than 10k ohms.
- ☐ Output voltage: measure and verify that the transformer outputs the correct voltage in accordance with nameplate specifications. Voltage may vary depending on actual power available at your facility.
- ☐ Phase connections: refer to the nameplate diagram to ensure correct phase connections.
- ☐ When windings are connected in parallel (in the case of dual voltage primaries), the primary taps for all coils must be connected to the identical percentage tap positions to avoid the shorting of turns. For tap positions, refer to the transformer nameplate.

- ☐ Grounding: check to ensure the enclosure is grounded with the appropriately sized conductor.
- ☐ Connections: check all electrical connections for proper clearance and tightness.
- ☐ Care must be taken to ensure the neutral current does not exceed ½ of the transformers kVA rating for single phase, 3-wire 240/120 volt loads.

Operation

For relatively normal clean installations, MT-BBT transformers will operate satisfactory under normal loads. Fully loaded transformers may be warm to the touch. Normal loading standards permit the enclosure to be 149°F (65°C) over ambient temperatures. MT-BBT transformers are designed to operate continuously at their full kVA rating.

ANSI C57.96 provides guidance for loading transformers under different conditions including:

- ➔ Varying ambient temperatures that are different from the ambient temperatures required for transformer operation.
- ➔ Short time overload as it relates to time and temperature and the corresponding loss of life of the transformer.
- ➔ Overload that results in the reduction of transformer life expectancy.

If the transformer is experiencing increased temperatures, the following load characteristics should be considered immediately:

- ➔ Rigorous motor starting loads or other impact type loading for which a specific transformer for that application is required.
- ➔ Over-excitation of the unit due to excess supply line voltage or current.
- ➔ Ambient temperatures above standard.
- ➔ Overload beyond ANSI C57.96 guidelines.
- ➔ Harmonic distortions of the supply line voltage and currents.

Maintenance:

Under normal operating conditions, MT-BBT transformers do not require maintenance. However, periodic care and inspection is good practice, particularly in extreme environmental conditions.

External inspection and removal of dust and dirt may be carried out while the transformer is in operation. However, access covers must not be open while energized.

The accumulation of dust and dirt will affect cooling of the transformer causing a potential fire hazard. Ice or snow will not adversely affect the operation of the transformer.

Warning: Do not perform internal maintenance without first de-energizing the transformer! The transformer must be isolated and the terminals grounded. Check all ground connections to ensure a low impedance connection.

Connection Diagram (Refer to the diagrams below for connecting the transformer. Choose the type that resembles your transformer.)

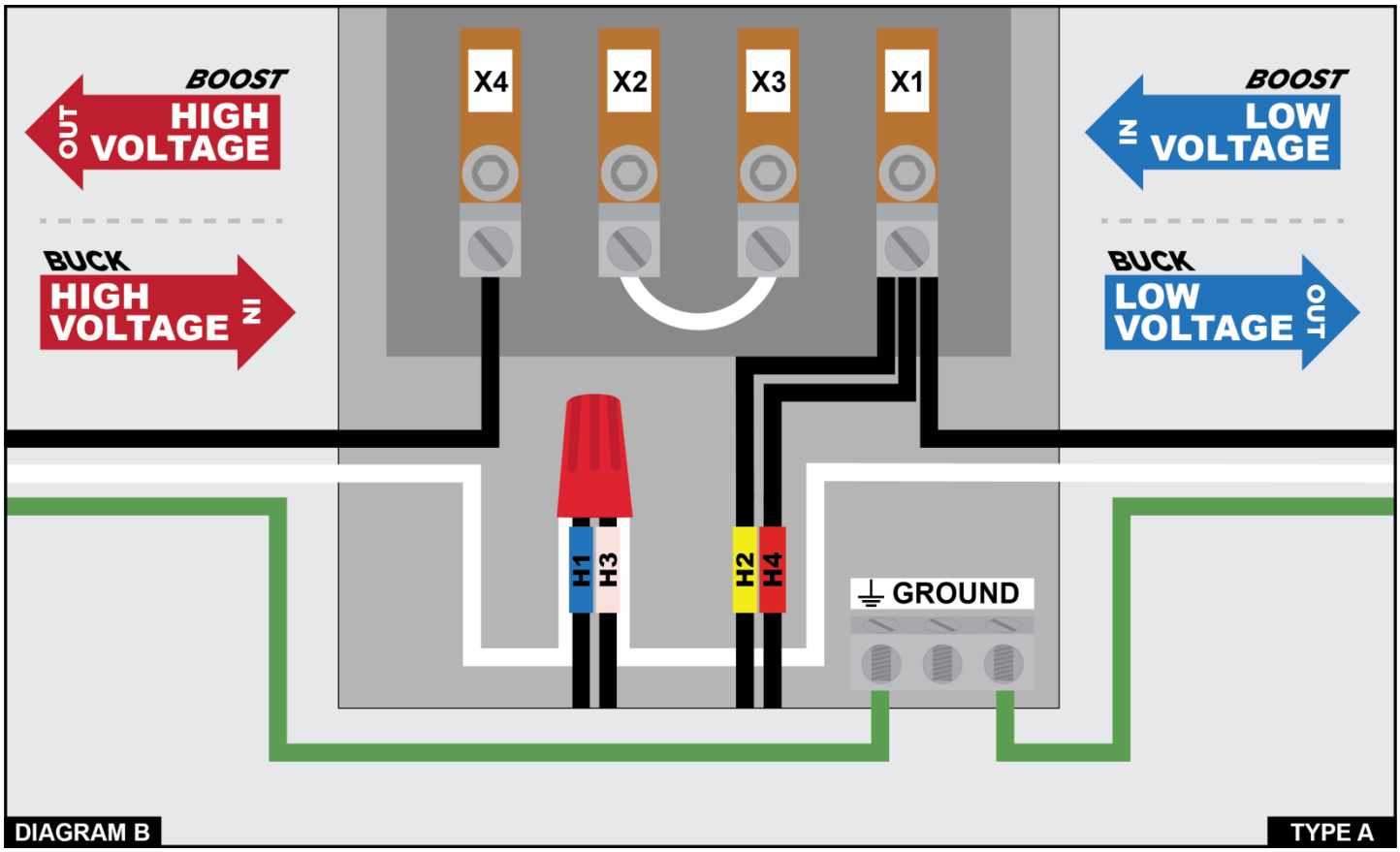

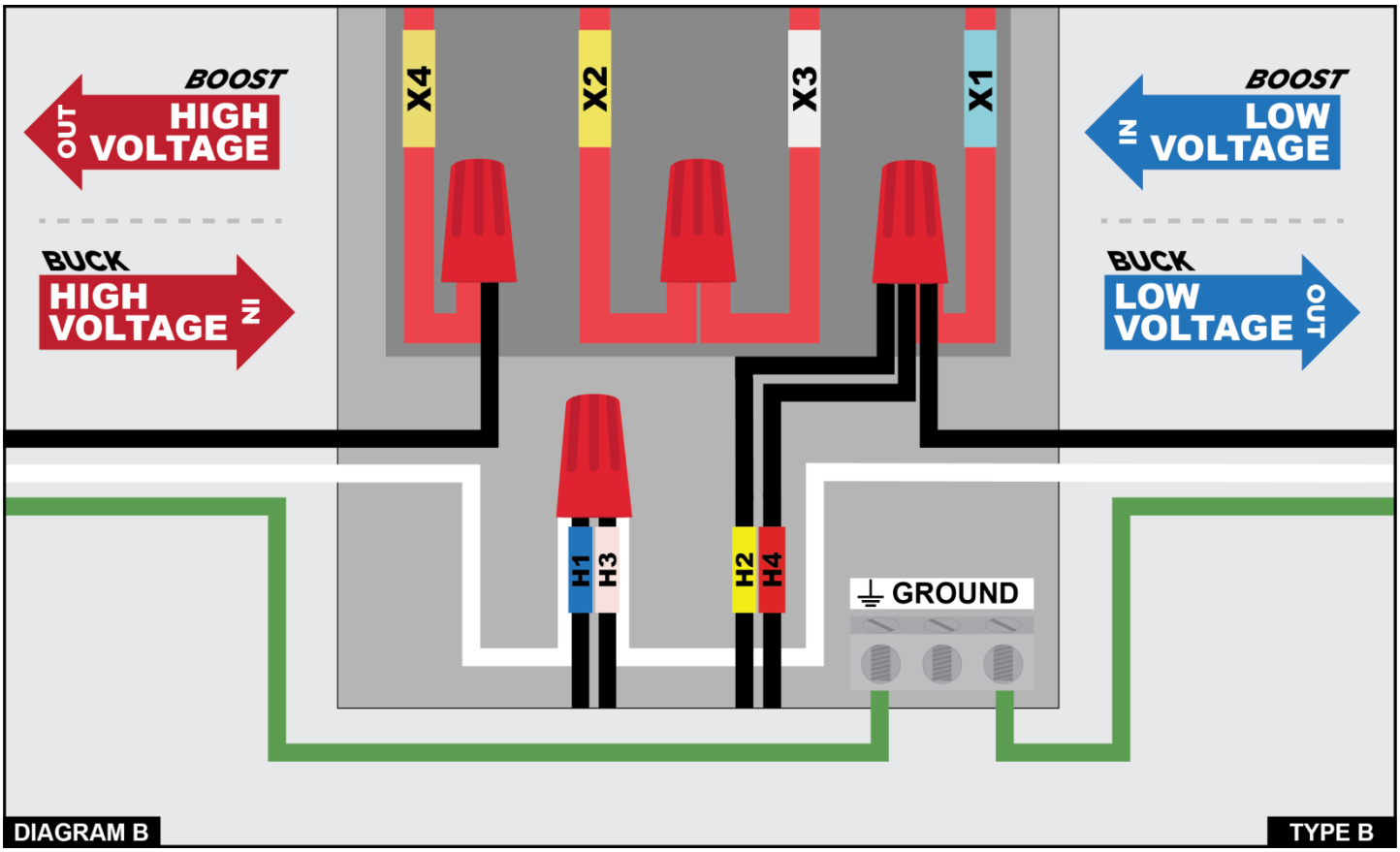

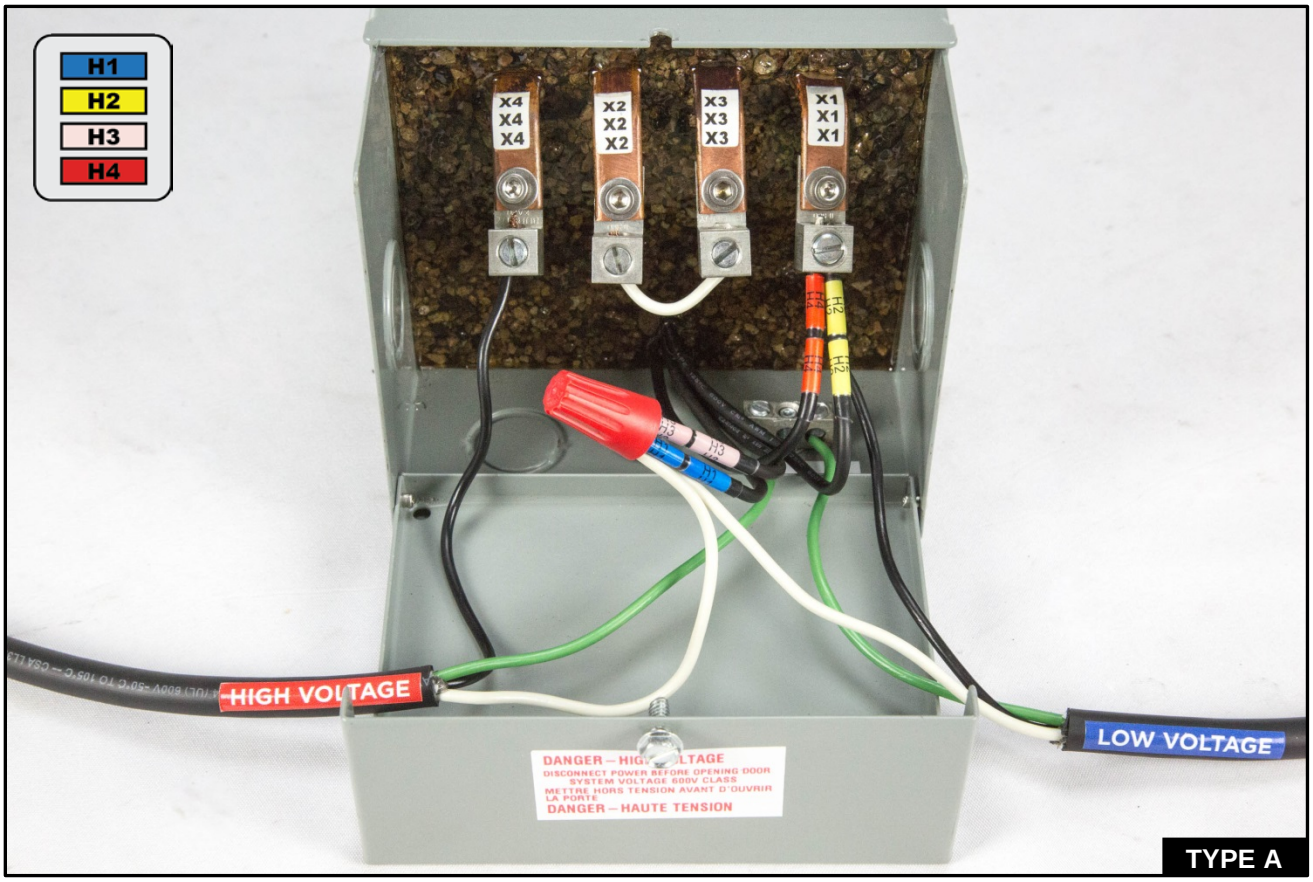
H1
H2
H3
H4
X4 X4 X4
X2 X2 X2
X3 X3 X3
X1 X1 X1
HIGH VOLTAGE
LOW VOLTAGE
DANGER – HAUTE TENSION

TYPE A

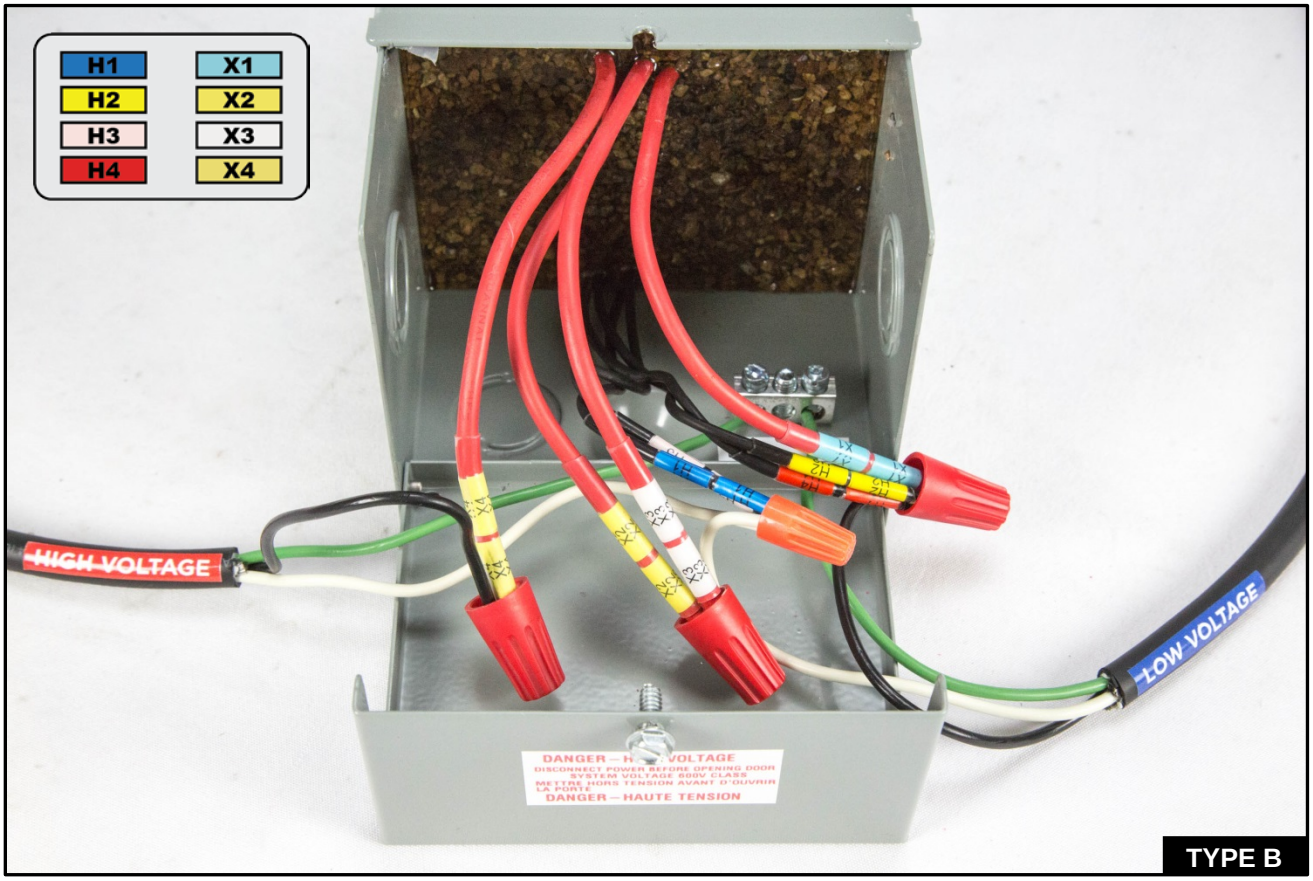
H1
H2
H3
H4
X1
X2
X3
X4
HIGH VOLTAGE
LOW VOLTAGE
DANGER – HAUTE TENSION

TYPE B

Wiring Diagram

WARNING: *DO NOT SERVICE WHILE ENERGIZED!* ***Tip: Use a voltmeter to check voltage!***

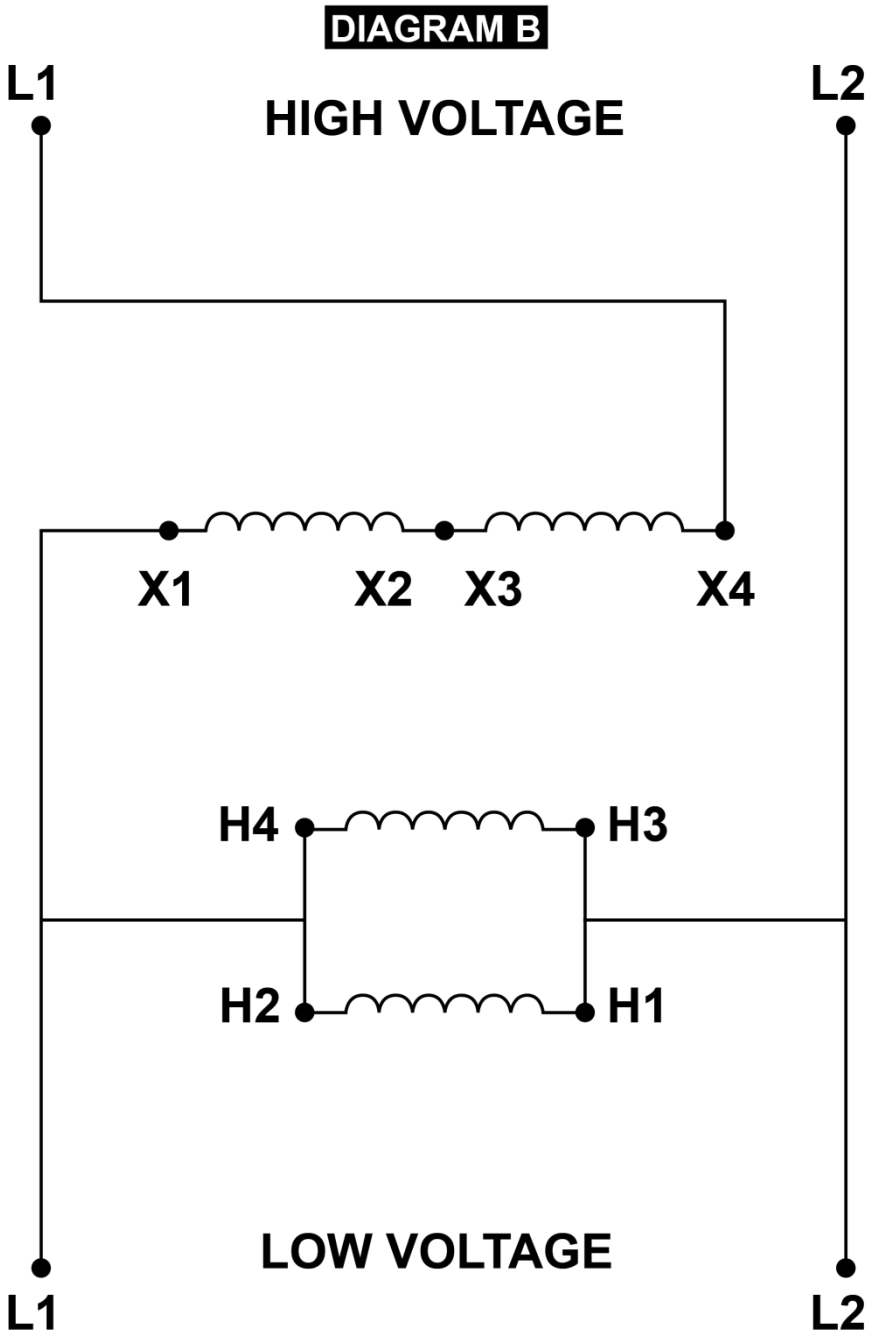

Connection Guide:

1. Connect **X2** and **X3** together
2. Connect High Voltage **L1** to **X4**
3. Connect Low Voltage **L1** to **X1, H4, H2**
4. Connect High & Low Voltage **L2** to **H1** and **H3**

STANDARD MODELS:

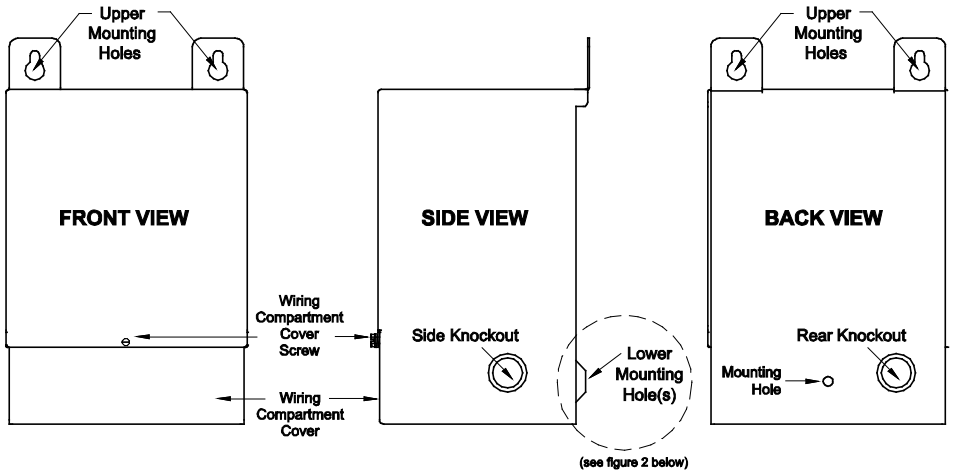

MODELS WITH LIFTING TABS:

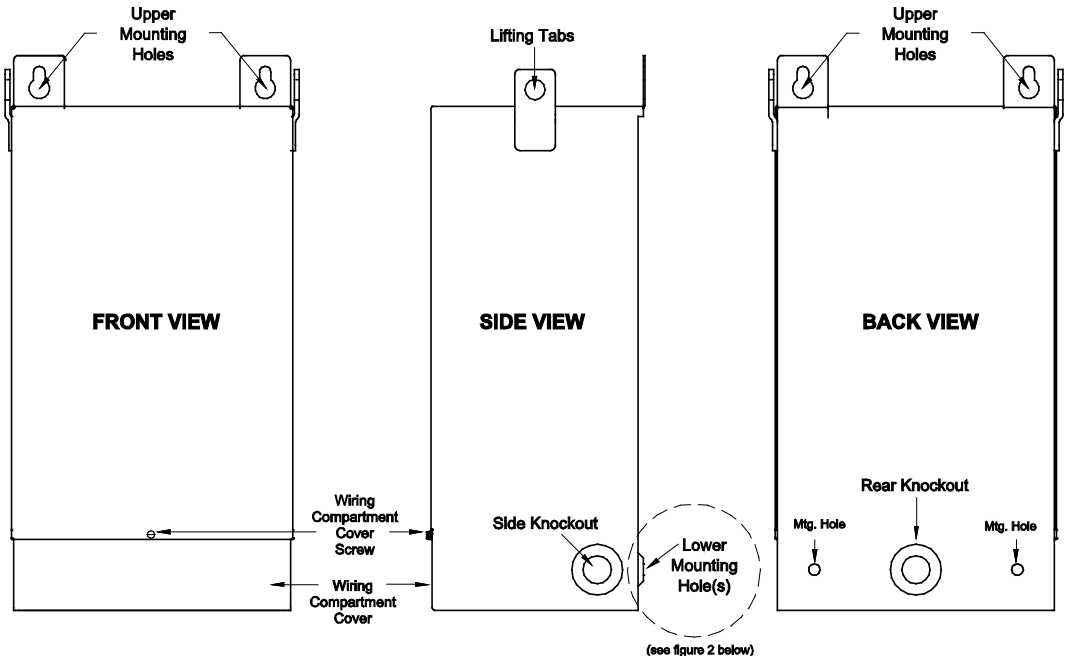
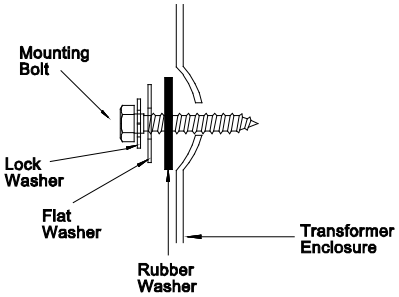
FIGURE 2: Lower wiring compartment mounting hole(s), mounting hardware installation assembly diagram.