REV	DESCRIPTION	DATE
A	PRODUCTION RELEASE	12/17/2020

IND-SM-BX-24-1L-UVC-SPF-AT-120V-15C-5.15

LARSON ELECTRONICS®

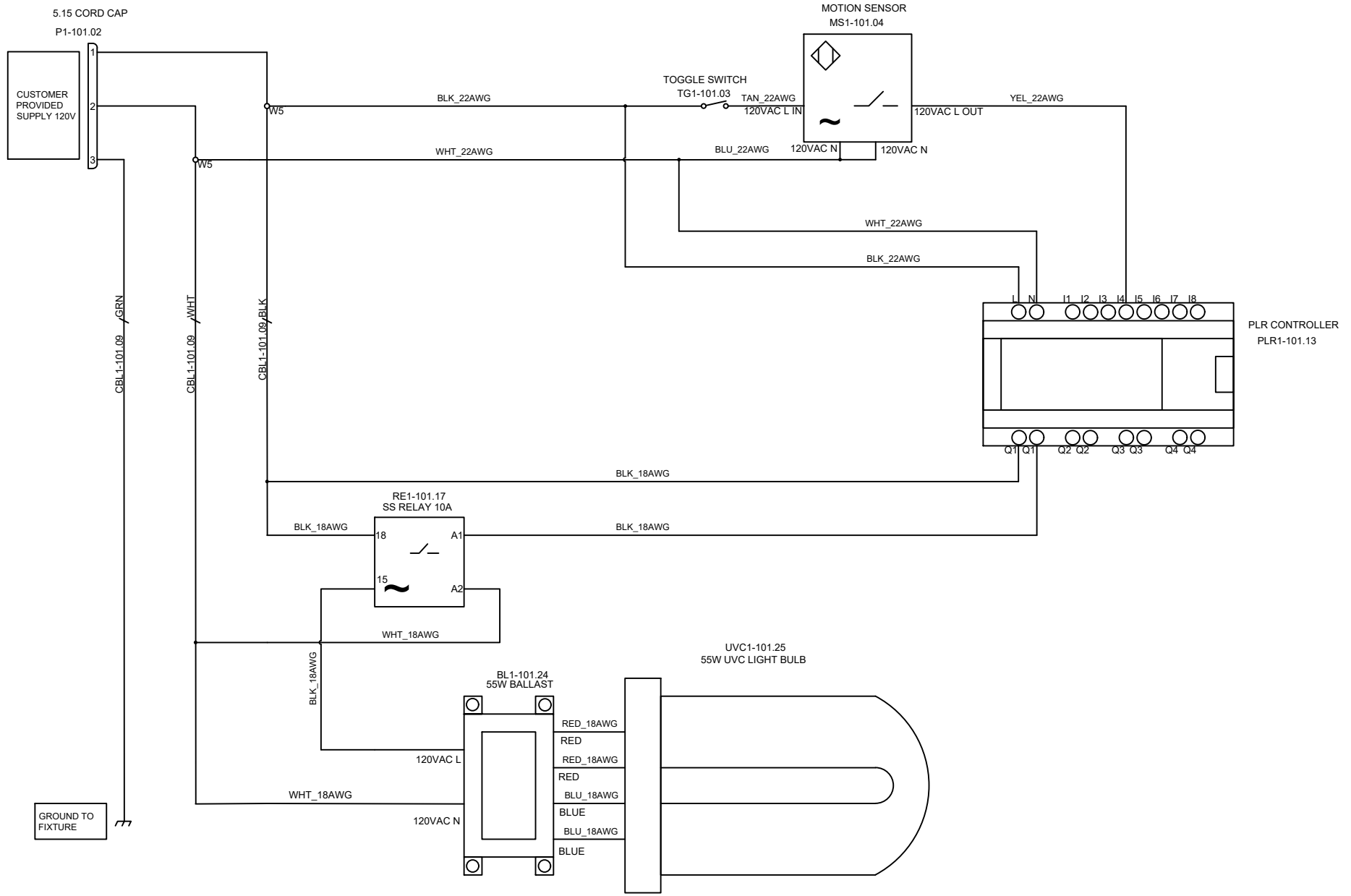

LARSON ELECTRONICS 9419 E US HWY 175, KEMP, TX 75143	TITLE IND-SM-BX-24-1L-UVC-SPF-AT-120V-15C-5.15		
	DRAWN BY R. BLACK	DATE 12/17/2020	REV A
	CHECKED BY K. NGUYEN	SHEET # 1 OF 2	DRAWING # 101

TAGS	QTY	CATALOG	DESCRIPTION
P1-101.02	1	UNV00006731	PLUG STRAIGHT BLADE - NEMA 5-15P
RE1-101.17	1	UNV00015812	SOLID STATE RELAY 10A
PLR1-101.13	1	UNV00015301	ELECTRIC LOGIC RELAY PLR
BL1-101.24	1	UNV00015402	55W BALLAST 4 PIN SINGLE LAMP
MS1-101.04	1	UNV00015429	PIR 180 DEG MOTION SENSOR
UVC1-101.25	1	UNV00015363	55W UVC BULB 2G11 BASE
TG1-101.03	1	UNV00010854	TOGGLE SWITCH 25A
W5	2	UNV00009803	5-CONDUCTOR LEVER CLAMP WAGO
CBL1-101.09	1	UNV00007524	16/3 SOOW UL 90C BLK

LARSON ELECTRONICS
9419 E US HWY 175,
KEMP, TX 75143

TITLE: IND-SM-BX-24-1L-UVC-SPF-AT-120V-15C-5.15

DRAWN BY	DATE	REV
R. BLACK	12/17/2020	A
CHECKED BY	SHEET #	DRAWING #
K. NGUYEN	2 OF 2	102