REV	DESCRIPTION	DATE
A	PRODUCTION RELEASE	06/25/2020

LED1X10WRE-1S-FLGP-DNS-12V-BLK-SP

LARSON ELECTRONICS®

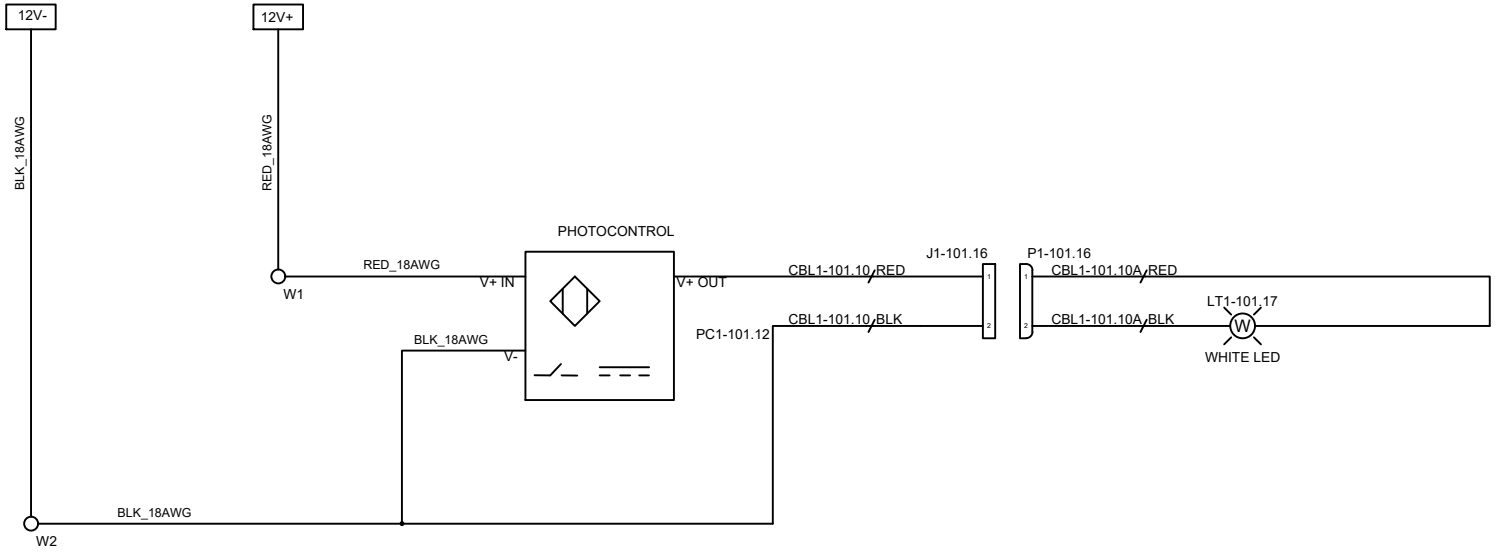

TAGS	QTY	CATALOG	DESCRIPTION
PC1-101.12	1	UNV00006499	PHOTOCONTROLS 12V
LT1-101.17	1	UNV00010037	10W LED 12VDC
W2	1	UNV00009803	5 HOLES WAGO
W1	1	UNV00011954	3 HOLE WAGO
CBL1-101.10 CBL1-101.10A	2	UNV00002075	16/2 SOOW - Price per Foot

LARSON ELECTRONICS
9419 E US HWY 175,
KEMP, TX 75143

TITLE: LED1X10WRE-1S-FLGP-DNS-12V-BLK-SP

DRAWN BY	DATE	REV
K.NGUYEN	06-25-2020	A
CHECKED BY	SHEET #	DRAWING #
P.CRYER	1 OF 1	101