REV	DESCRIPTION	DATE
A	PRODUCTION RELEASE	07/07/2021

EPP-250-2P-3X-8FT-15A

LARSON ELECTRONICS®

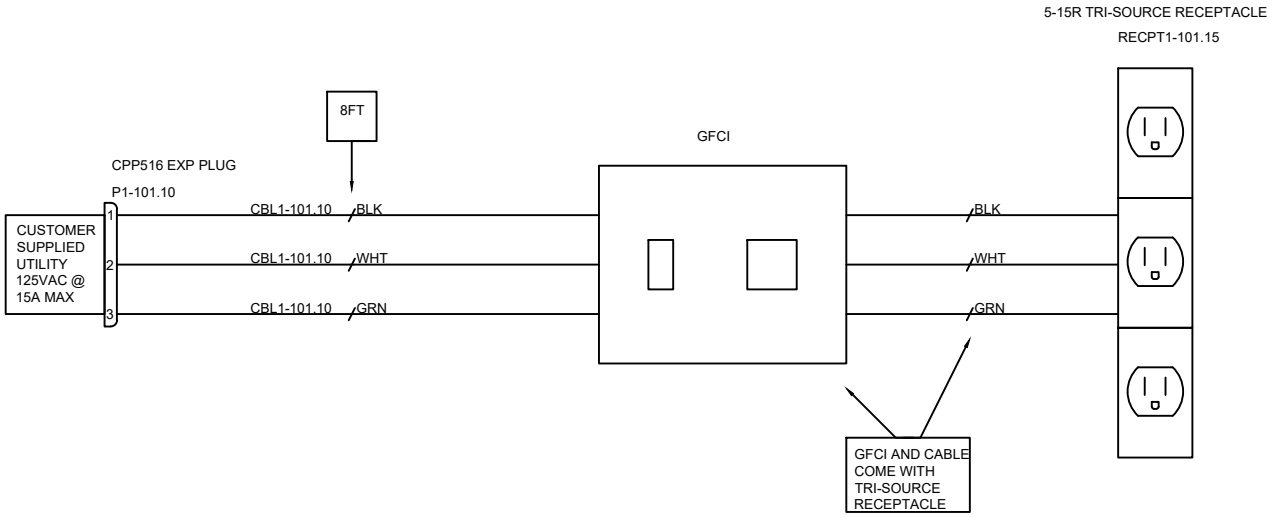

TAGS	QTY	CATALOG	DESCRIPTION
P1-101.10	1	UNV00002093	20A 120/240VAC EXP PLUG
RECPT1-101.15	1	UNV00001096	12/3 CORD SET TRI-SOURCE 5-15R
CBL1-101.10	1	UNV00016498	12/3 SOOW

LARSON ELECTRONICS

9419 E US HWY 175,
KEMP, TX 75143

TITLE: EPP-250-2P-3X-8FT-15A

DRAWN BY	DATE	REV
K.NGUYEN	07/07/2021	A
CHECKED BY	SHEET #	DRAWING #
P.CRYER	1 OF 1	101