REV	DESCRIPTION	DATE
A	PRODUCTION RELEASE	06-08-2020
B	UPDATED WIRING DIAGRAM	07/29/2021

SPLT-1.06K-LM30-6XWP600E-AT-BC

LARSON ELECTRONICS®

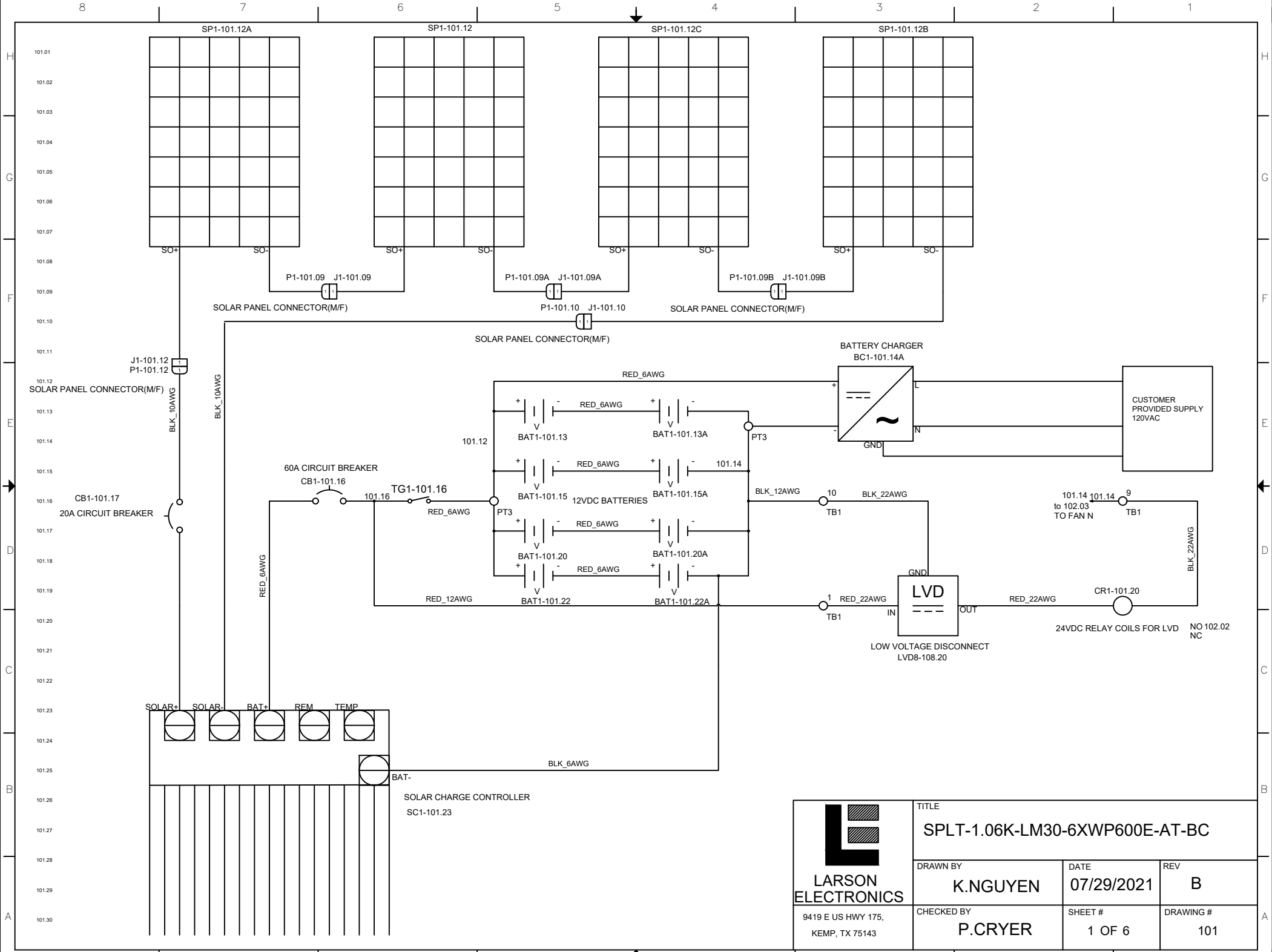

LARSON ELECTRONICS 9419 E US HWY 175, KEMP, TX 75143	TITLE: SPLT-1.06K-LM30-6XWP600E-AT-BC		
	DRAWN BY: K.NGUYEN	DATE: 07/29/2021	REV: B
	CHECKED BY: P.CRYER	SHEET #: 1 OF 6	DRAWING #: 101

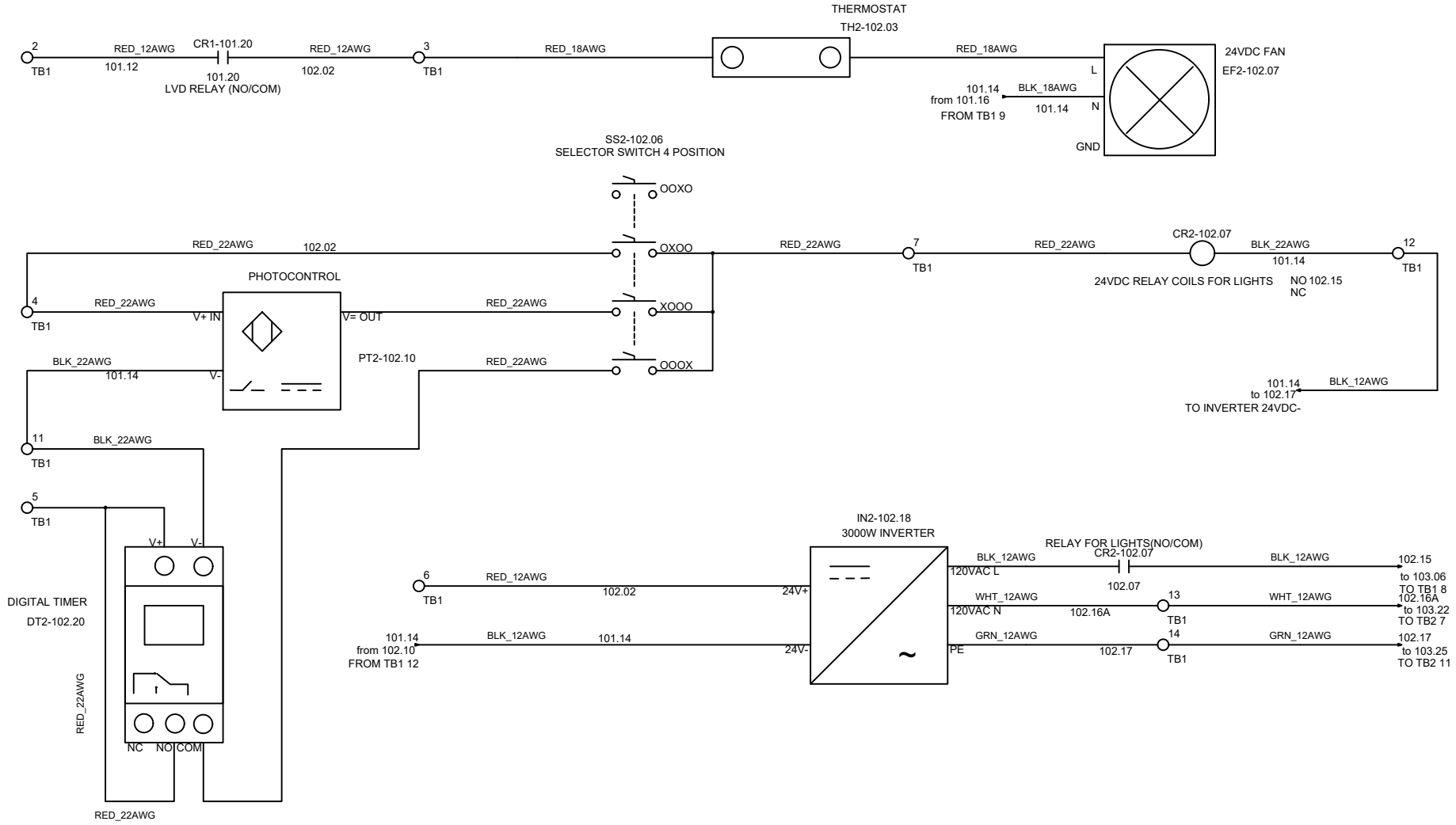

LARSON ELECTRONICS 9419 E US HWY 175, KEMP, TX 75143	TITLE: SPLT-1.06K-LM30-6XWP600E-AT-BC		
	DRAWN BY: K.NGUYEN	DATE: 07/29/2021	REV: B
	CHECKED BY: P.CRYER	SHEET #: 2 OF 6	DRAWING #: 102

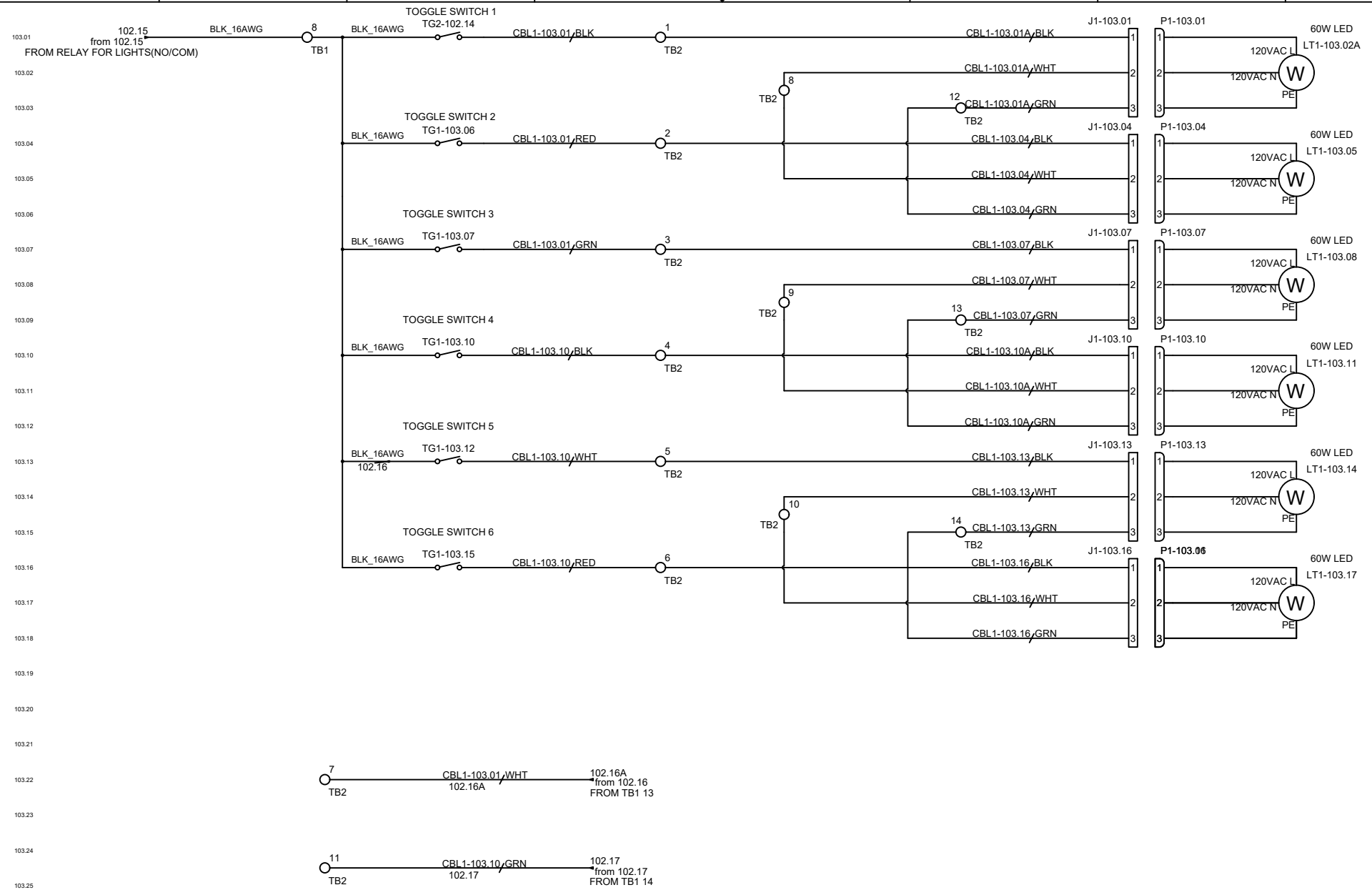

LARSON ELECTRONICS

9419 E US HWY 175,
KEMP, TX 75143

TITLE			
SPLT-1.06K-LM30-6XWP600E-AT-BC			
DRAWN BY	DATE	REV	
K.NGUYEN	07/29/2021	B	
CHECKED BY	SHEET #	DRAWING #	
P.CRYER	3 OF 6	103	

TAGS	QTY	CATALOG	DESCRIPTION
BAT1-101.13 BAT1-101.13A BAT1-101.15 BAT1-101.15A BAT1-101.20 BAT1-101.20A BAT1-101.22 BAT1-101.22A	8	UNV00009854	80 BATTERIES 12V 250AH
P1-101.09 P1-101.09A P1-101.09B P1-101.10 P1-101.12	5	UNV00001349	SOLAR CONNECTOR MALE
J1-101.09 J1-101.09A J1-101.09B J1-101.10 J1-101.12	5	UNV00001350	SOLAR CONNECTOR FEMALE
CB1-101.17	1	UNV00001347	CIRCUIT BREAKER, 20A 150VDC, 1-POLE, DIN MOUNT,
CB1-101.16	1	UNV00001791	60AMP 12-48VDC BREAKER
CR1-101.20 CR2-102.07	2	UNV00013952	General Purpose Relays 24VDC FLNGMT DPST-NO RoHS Compliant
EF2-102.07	1	UNV00011964	24VDC ELECTRIC FAN
SP1-101.12 SP1-101.12A SP1-101.12B SP1-101.12C	4	UNV00005453	300W SOLAR PANEL
2-102.10	1	UNV00006500	24V STEM MOUNT PHOTOCONTROL
IN2-102.18	1	UNV00006697	3000W SOLAR POWER INVERTER OFF GRID 24VDC -120VAC
LT1-103.02A LT1-103.05 LT1-103.08 LT1-103.11 LT1-103.14 LT1-103.17	6	UNV00008125	60W 120/227VAC 5600K LED
DT2-102.20	1	UNV00012653	DIGITAL TIME SWITCH PROGRAMMABLE
SC1-101.23	1	UNV00006003	TRISTAR MPPT SOLAR CHARGE CONTROLLER 60 AMP UP TO 150 VOC INPUT, 12-48 VOLTS. 12V-800 WATTS 24V-1600 WATTS 48V-3200 WATTS 11.4'X5.1'X5.6
BC1-101.14A	1	UNV00014438	24V 50AMP CHARGER CONVERTER POWER SUPPLY
2-102.03	1	UNV00009886	THERMOSTAT
LVD8-108.20	1	UNV00011964	LOW VOLTAGE DISCONNECT 24V
SS2-102.06	1	AR30WCR-441CBZC	4 POSITIONS MAINTAINED 2NO 2NC ELECOR SWITCH
TG1-103.06 TG1-103.07 TG1-103.10 TG1-103.12 TG1-103.15 TG2-102.14	6	UNV00010854	TOGGLE SWITCH
TG1-101.16	1	UNV00014267	CONTROL SWITCH 300A 24VDC
TB1	8	UNV00013971	2 HOLE GREY TB
TB1 TB2	5	UNV00013976	RED JUMPER FOR 2 HOLE TERM BLOCK
TB2	6	UNV00013971	2 HOLE GREY TB
TB1 TB2	9	UNV00013970	2 HOLE BLUE TB
TB1 TB2	5	UNV00013989	2 HOLE GREEN TB
PT3	2	UNV00008883	3 HOLE POLARIS 4-14AWG
CBL1-103.01A CBL1-103.04 CBL1-103.07 CBL1-103.10A CBL1-103.13 CBL1-103.16	6	UNV00007524	16/3 SOOW CABLE- BLACK
CBL1-103.01 CBL1-103.10	2	UNV00002911	SOOW Portable Cord, 16/4 AWG, Black, Reel Pack

LARSON ELECTRONICS
9419 E US HWY 175,
KEMP, TX 75143

TITLE: SPLT-1.06K-LM30-6XWP600E-AT-BC

DRAWN BY	DATE	REV
K.NGUYEN	07/29/2021	B
CHECKED BY	SHEET #	DRAWING #
P.CRYER	4 OF 6	104

TB1													
Device1	Pin1	Wire1	Type1	T1	Number	T2	Manufacturer	Catalog	Type2	Wire2	Pin2	Device2	Jumper
TG1-101.16		101.16	RED_12AWG		1		PHOENIX CONTACT	3031364	RED_20AWG	101.16	IN	LVD8-108.20	
CR1-101.20		101.12	RED_12AWG		2		PHOENIX CONTACT	3031364					
CR1-101.20		102.02	RED_12AWG		3		PHOENIX CONTACT	3031364	RED_18AWG	102.02		2-102.03	
SS2-102.07		102.02	RED_20AWG		4		PHOENIX CONTACT	3031364	RED_20AWG	102.02	V+ IN	2-102.10	
DT2-102.20	V+		RED_20AWG		5		PHOENIX CONTACT	3031364					
IN2-102.18	24V+	102.02	RED_14AWG		6		PHOENIX CONTACT	3031364					
SS2-102.09		102.06	RED_20AWG		7		PHOENIX CONTACT	3031364	RED_20AWG	102.06		SS2-102.07	
CR2-102.07		102.06	RED_20AWG										
CR2-102.07			BLK_16AWG		8		PHOENIX CONTACT	3031306	BLK_16AWG	102.16		TG2-102.14	
TG1-103.06		102.16	BLK_16AWG										
EF2-102.07	N	101.14	BLK_16AWG		9		PHOENIX CONTACT	3031377	BLK_20AWG	101.14		CR1-101.20	
BAT1-101.20 A	-	101.14	BLK_6AWG		10		PHOENIX CONTACT	3031377	BLK_6AWG	101.14	-	BAT1-101.15 A	
LVD8-108.20	GND	101.14	BLK_20AWG										
2-102.10	V-	101.14	BLK_20AWG		11		PHOENIX CONTACT	3031377	BLK_20AWG	101.14	V-	DT2-102.20	
CR2-102.07		101.14	BLK_20AWG		12		PHOENIX CONTACT	3031377	BLK_12AWG	101.14	24V-	IN2-102.18	
IN2-102.18	120VAC N	102.16A	WHT_12AWG		13		PHOENIX CONTACT	3031377	WIRES	102.16A	7	TB2	
IN2-102.18	PE	102.17	GRN_12AWG		14		PHOENIX CONTACT	3031380	WIRES	102.17	11	TB2	

LARSON ELECTRONICS
9419 E US HWY 175,
KEMP, TX 75143

TITLE: SPLT-1.06K-LM30-6XWP600E-AT-BC

DRAWN BY	DATE	REV
K.NGUYEN	07/29/2021	B
CHECKED BY	SHEET #	DRAWING #
P.CRYER	5 OF 6	105

TB2																	
Installation1	Location1	Device1	Pin1	Wire1	Type1	T1	Number	T2	Manufacturer	Catalog	Type2	Wire2	Pin2	Device2	Location2	Installation2	Jumper
	(??)	TG2-102.14			WIRES		1		PHOENIX CONTACT	3031364	WIRES		1	J1-103.01	(??)		
	(??)	TG1-103.06			WIRES		2		PHOENIX CONTACT	3031364	WIRES		1	J1-103.04	(??)		
	(??)	TG1-103.07			WIRES		3		PHOENIX CONTACT	3031364	WIRES		1	J1-103.07	(??)		
	(??)	TG1-103.10			WIRES		4		PHOENIX CONTACT	3031364	WIRES		1	J1-103.10	(??)		
	(??)	TG1-103.12			WIRES		5		PHOENIX CONTACT	3031364	WIRES		1	J1-103.13	(??)		
	(??)	TG1-103.15			WIRES		6		PHOENIX CONTACT	3031364	WIRES		1	J1-103.16	(??)		
	(??)	TB1	14	102.16A	WIRES		7		PHOENIX CONTACT	3031377							
	(??)	J1-103.01	2		WIRES		8		PHOENIX CONTACT	3031377	WIRES		2	J1-103.04	(??)		
	(??)	J1-103.07	2		WIRES		9		PHOENIX CONTACT	3031377	WIRES		2	J1-103.10	(??)		
	(??)	J1-103.13	2		WIRES		10		PHOENIX CONTACT	3031377	WIRES		2	J1-103.16	(??)		
	(??)	TB1	15	102.17	WIRES		11		PHOENIX CONTACT	3031380							
	(??)	J1-103.04	3		WIRES		12		PHOENIX CONTACT	3031380	WIRES		3	J1-103.01	(??)		
	(??)	J1-103.10	3		WIRES		13		PHOENIX CONTACT	3031380	WIRES		3	J1-103.07	(??)		
	(??)	J1-103.16	3		WIRES		14		PHOENIX CONTACT	3031380	WIRES		3	J1-103.13	(??)		

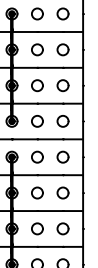

LARSON ELECTRONICS

9419 E US HWY 175,
KEMP, TX 75143

TITLE: SPLT-1.06K-LM30-6XWP600E-AT-BC

DRAWN BY	DATE	REV
K.NGUYEN	07/29/2021	B
CHECKED BY	SHEET #	DRAWING #
P.CRYER	6 OF 6	106