REV	DESCRIPTION	DATE
A	PRODUCTION RELEASE	09/16/2020

EXHL-TRN-LE3-IR-1227-EYS-25C-FL-850NM

LARSON ELECTRONICS®

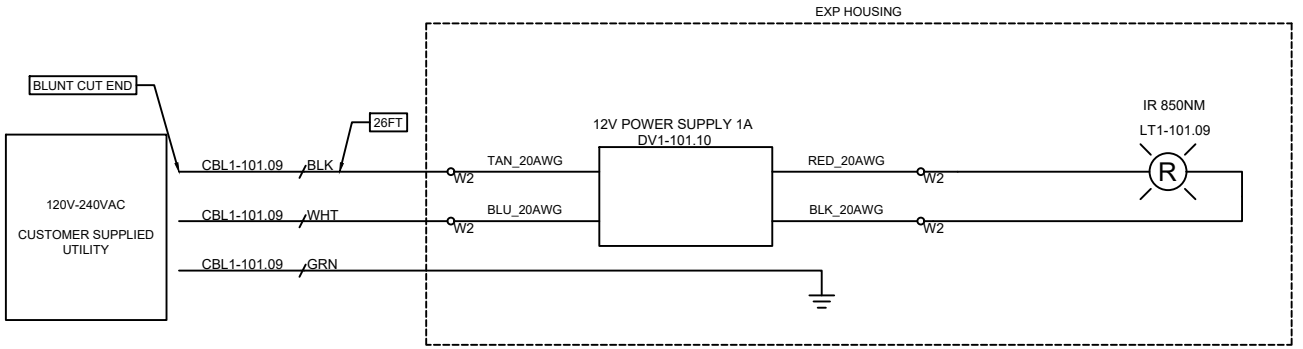

LARSON ELECTRONICS 9419 E US HWY 175, KEMP, TX 75143	TITLE: EXHL-TRN-LE3-IR-1227-EYS-25C-FL-850NM		
	DRAWN BY: R.BLACK	DATE: 09/16/2020	REV: A
	CHECKED BY: P.CRYER	SHEET #: 1 OF 1	DRAWING #: 101