REV	DESCRIPTION	DATE
A	PRODUCTION RELEASE	5/31/2022

GAU-LTL-500W-LED-IR-OPQ -24WS-750NM

LARSON ELECTRONICS®

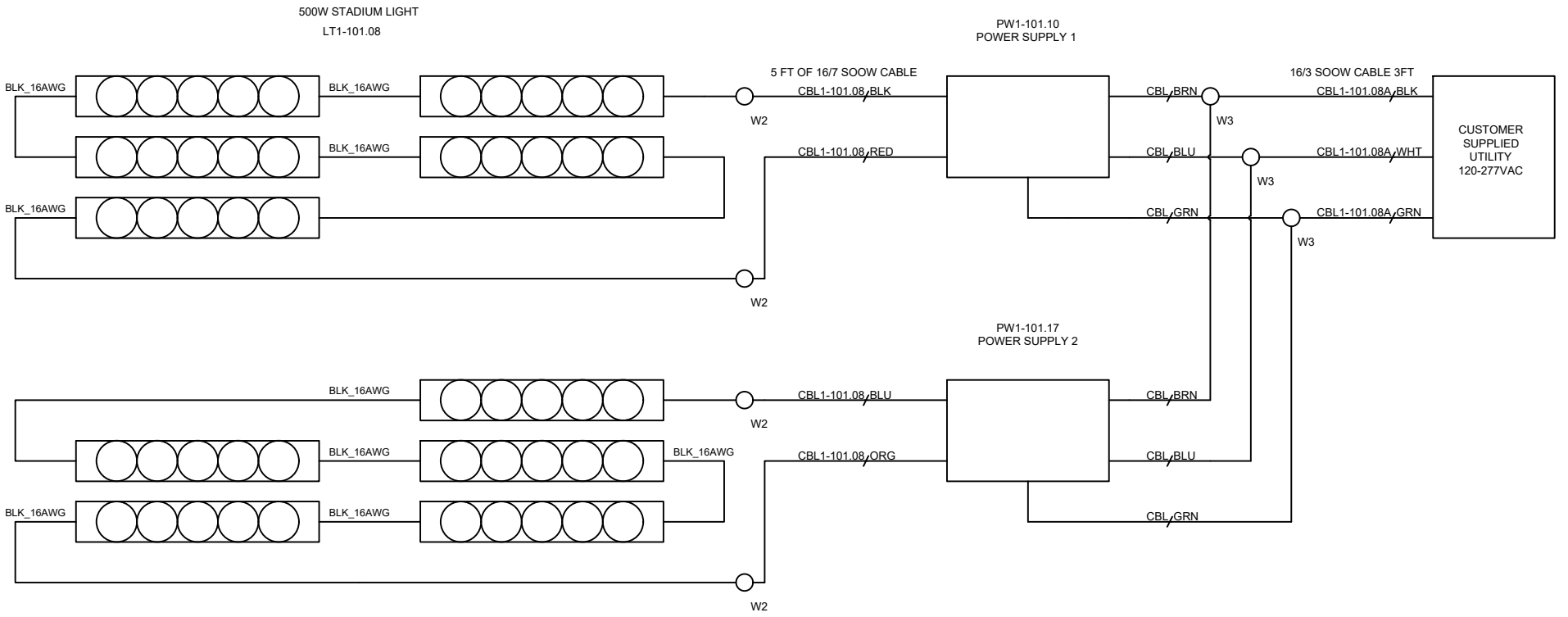

TAGS	QTY	CATALOG	DESCRIPTION
LT1-101.08	1	UNV00008023	500W STADIUM LIGHTS
PW1-101.10 PW1-101.17	2	UNV00012815	LED Power Supplies 200.2W 700mA143-286V
W2	4	UNV00009802	2 HOLE WAGO
W3	1	UNV00011954	3 HOLE WAGO
CBL1-101.08	1	UNV00002853	16/7 SOOW..C-SOOW-16-7
CBL1-101.08A	1	UNV00007524	CORD 16/3 SOOW UL 90C BLK CABLE

LARSON ELECTRONICS

9419 E US HWY 175,
KEMP, TX 75143

TITLE: GAU-LTL-500W-LED-IR-OPQ-24WS-750NM

DRAWN BY	DATE	REV
S.DESAI	5/31/2022	A
CHECKED BY	SHEET #	DRAWING #
K.NGUYEN	1 OF 1	101