| REV | DESCRIPTION | DATE |
|---|---|---|
| A | PRODUCTION RELEASE | 09/17/2020 |

# GAU-LTL-500W-LED-IR-XX-850NM

LARSON ELECTRONICS®

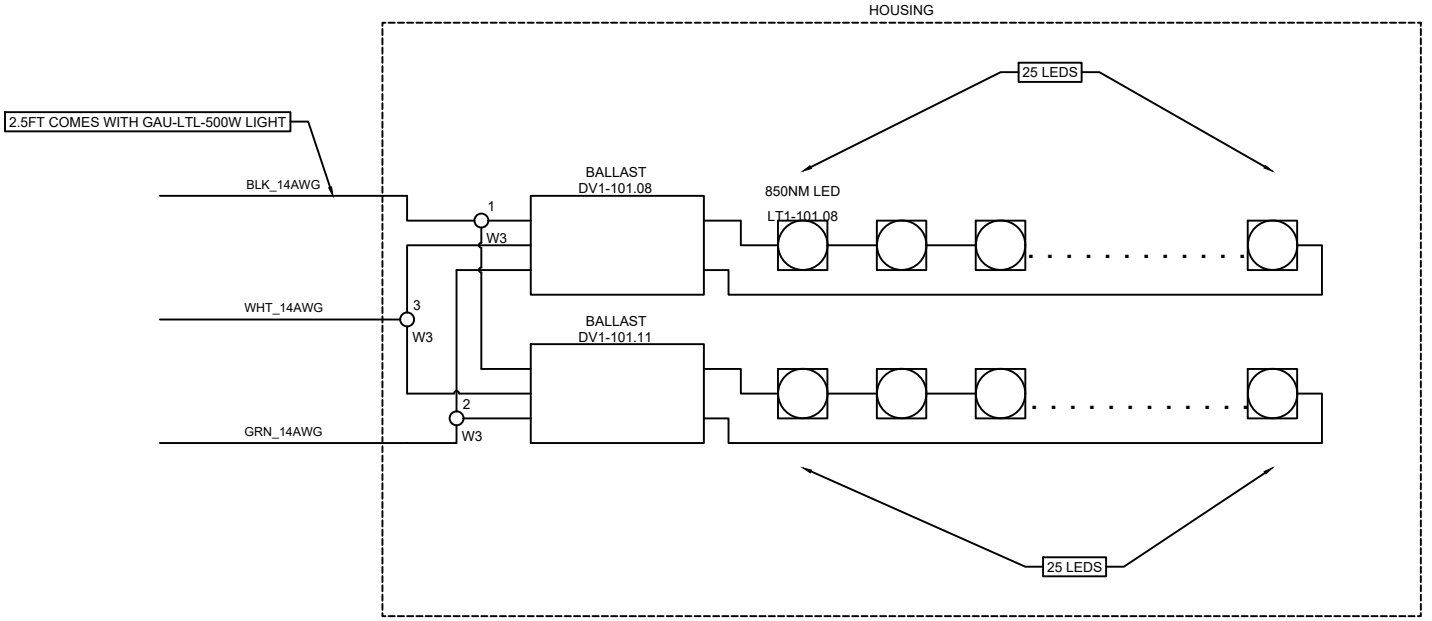


| TAGS | QTY | CATALOG | DESCRIPTION |
|---|---|---|---|
| DV1-101.08<br>DV1-101.11 | 2 | N/A | HLG-185H-C500A |
| LT1-101.08 | 50 | UNV00012630 | 850NM LED SMD |
| W3 | 3 | UNV00011954 | 3-CONDUCTOR LEVER CLAMP WAGO |

LARSON ELECTRONICS

9419 E US HWY 175,
KEMP, TX 75143

TITLE: GAU-LTL-500W-LED-IR-XX-850NM

| DRAWN BY | DATE | REV |
|---|---|---|
| R.BLACK | 09/17/2020 | A |
| CHECKED BY | SHEET # | DRAWING # |
| P.CRYER | 1 OF 1 | 101 |