REV	DESCRIPTION	DATE
A	PRODUCTION RELEASE	11-27-2023

HALP-96-2L-LED-1227-SFC.0.75IN-45K

LARSON ELECTRONICS®

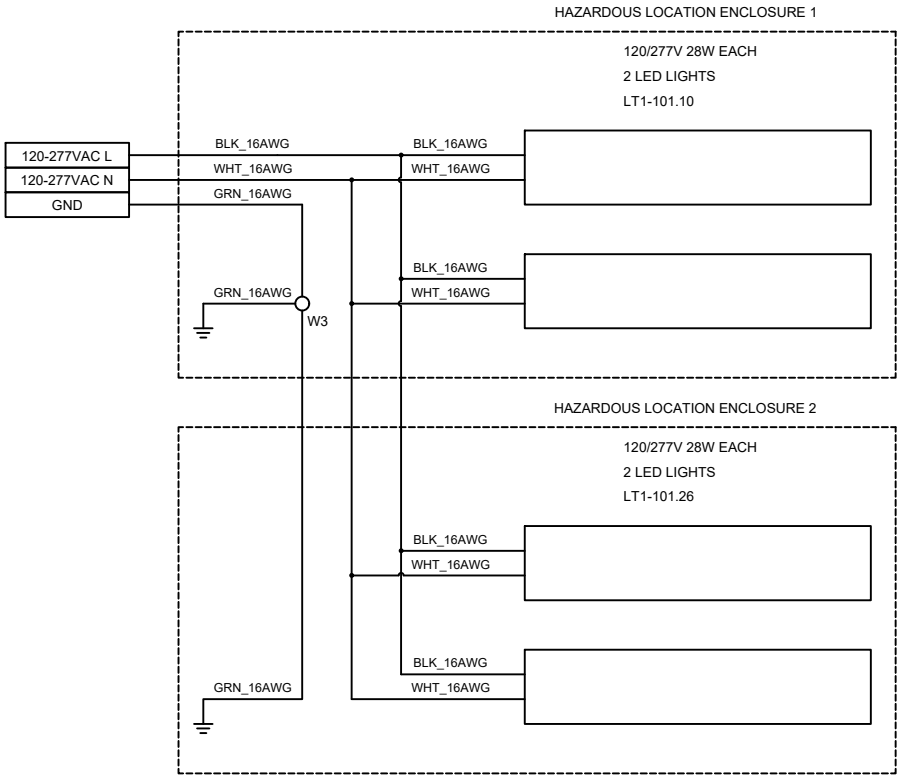

TAGS	QTY	CATALOG	DESCRIPTION
LT1-101.10 LT1-101.26	2	UNV00004688	4FT 2 LAMP - C1D2 120-277VAC LED
W3	1	UNV00011954	3 HOLE WAGO

LARSON ELECTRONICS

9419 E US HWY 175,
KEMP, TX 75143

TITLE: HALP-96-2L-LED-1227-SFC.0.75IN-45K			
DRAWN BY: J.Maldonado	DATE: 11-27-2023	REV: A	
CHECKED BY: S.Desai	SHEET #: 1 OF 1	DRAWING #: 101	