REV	DESCRIPTION	DATE
A	PRODUCTION RELEASE	6/17/2022

SPLT-1.06K-LM30-8XWP600E-AT-BC

LARSON ELECTRONICS®

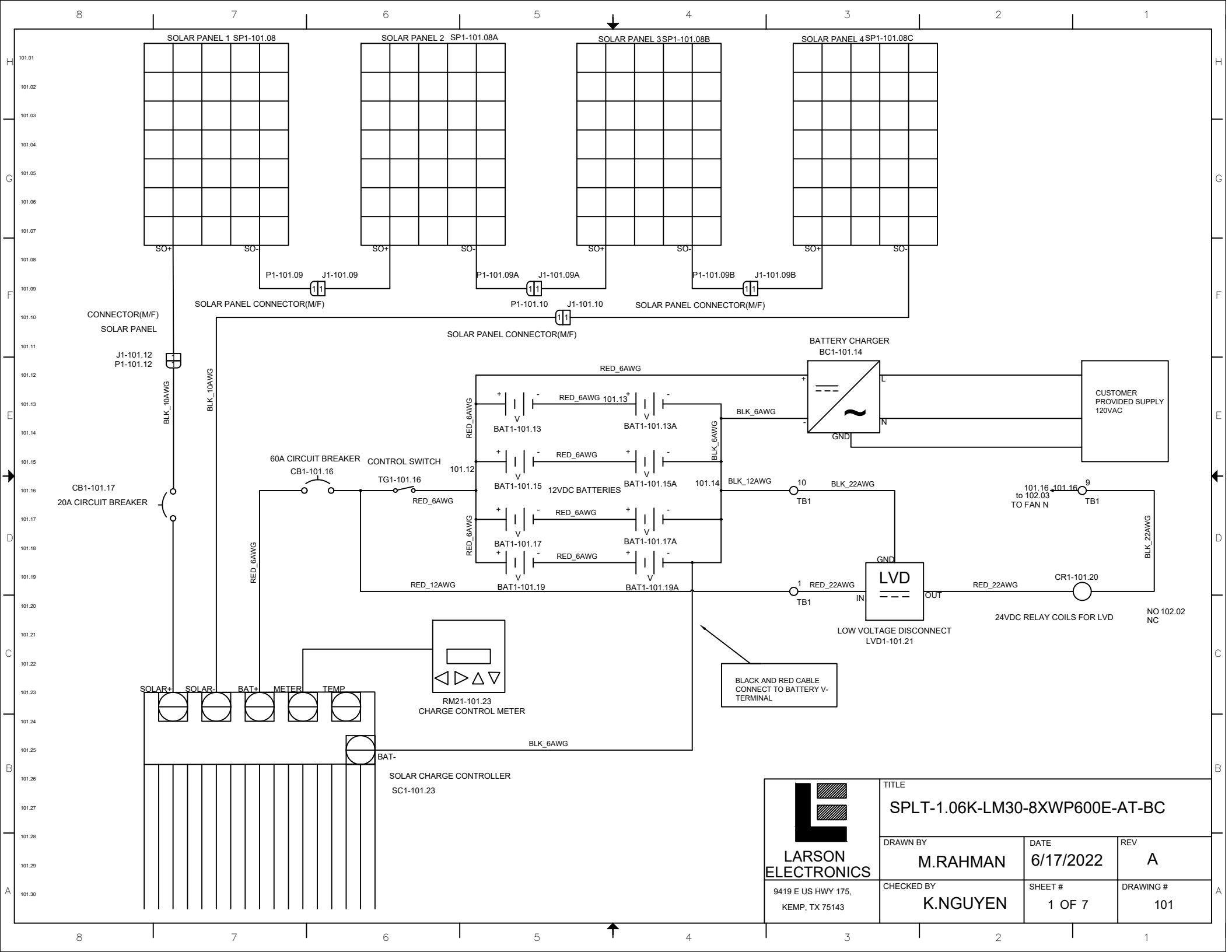

LARSON ELECTRONICS
9419 E US HWY 175,
KEMP, TX 75143

TITLE			
SPLT-1.06K-LM30-8XWP600E-AT-BC			
DRAWN BY	M.RAHMAN	DATE	6/17/2022	REV	A
CHECKED BY	K.NGUYEN	SHEET #	1 OF 7	DRAWING #	101

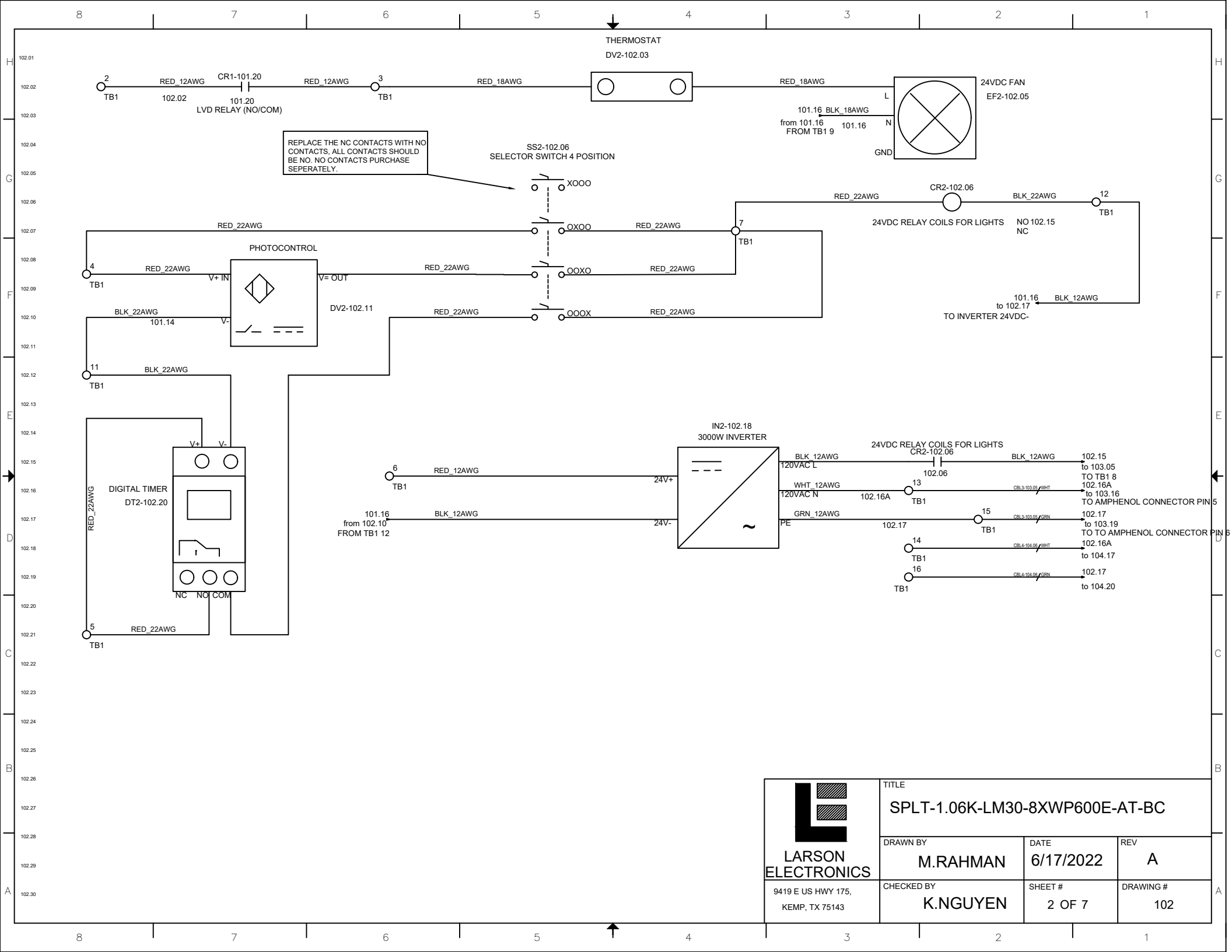

LARSON ELECTRONICS 9419 E US HWY 175, KEMP, TX 75143	TITLE: SPLT-1.06K-LM30-8XWP600E-AT-BC		
	DRAWN BY: M.RAHMAN	DATE: 6/17/2022	REV: A
	CHECKED BY: K.NGUYEN	SHEET #: 2 OF 7	DRAWING #: 102

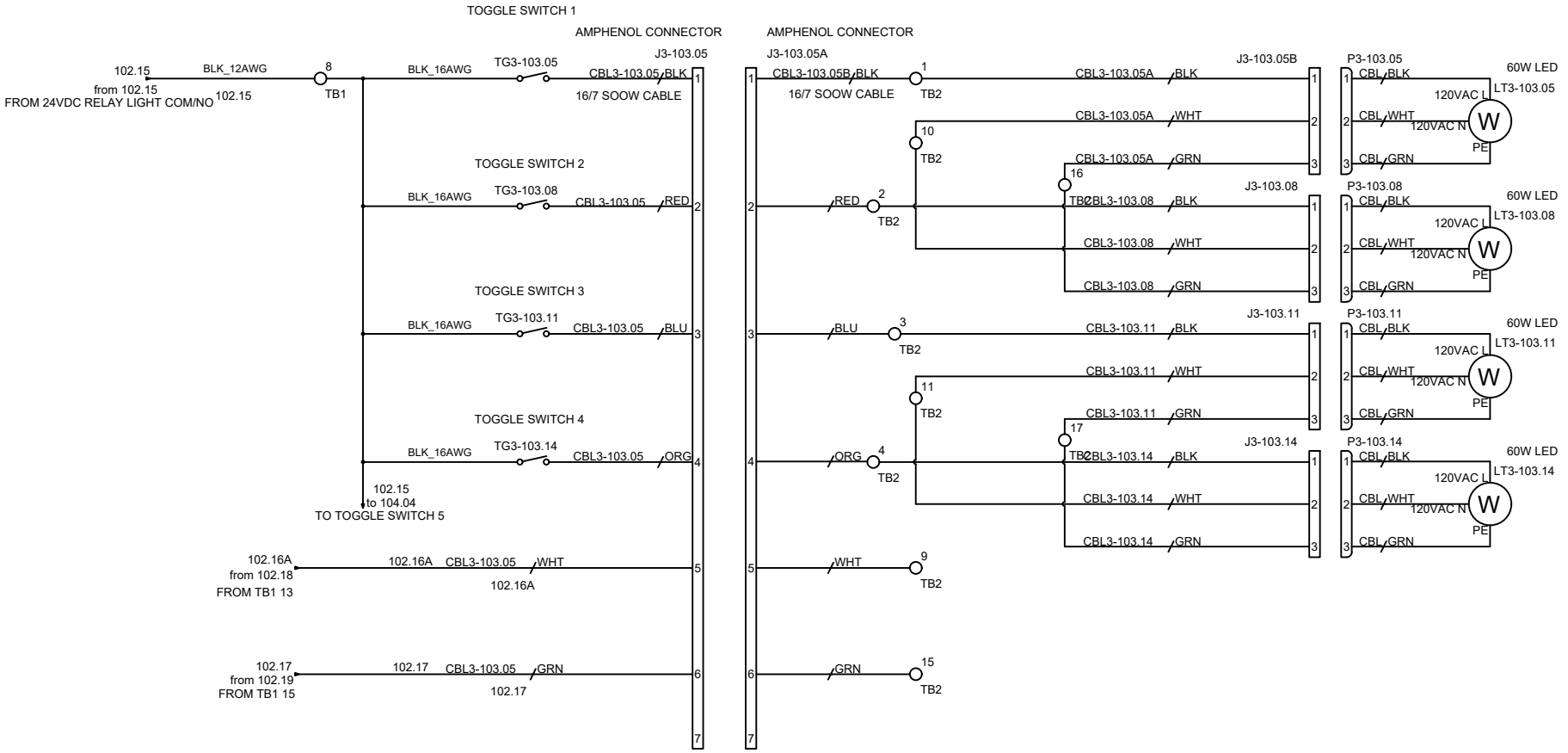

LARSON ELECTRONICS

9419 E US HWY 175,
KEMP, TX 75143

TITLE			
SPLT-1.06K-LM30-8XWP600E-AT-BC			
DRAWN BY	DATE	REV	
M.RAHMAN	6/17/2022	A	
CHECKED BY	SHEET #	DRAWING #	
K.NGUYEN	3 OF 7	103	

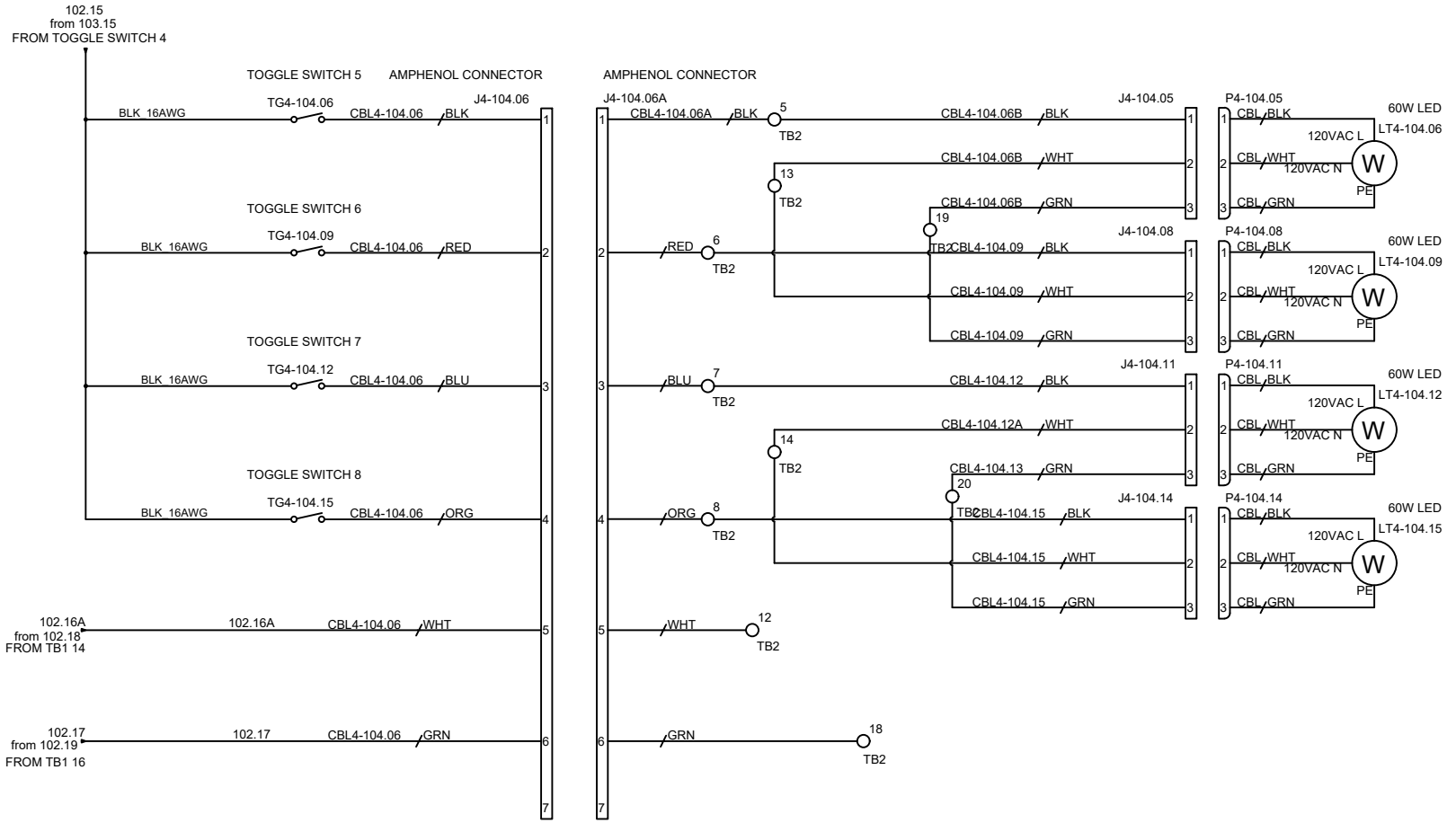

LARSON ELECTRONICS 9419 E US HWY 175, KEMP, TX 75143	TITLE: SPLT-1.06K-LM30-8XWP600E-AT-BC		
	DRAWN BY: M.RAHMAN	DATE: 6/17/2022	REV: A
	CHECKED BY: K.NGUYEN	SHEET #: 4 OF 7	DRAWING #: 104

TAGS	QTY	CATALOG	DESCRIPTION
BAT1-101.13 BAT1-101.13A BAT1-101.15 BAT1-101.15A BAT1-101.17 BAT1-101.17A BAT1-101.19 BAT1-101.19A	8	UNV00009854	250AH 12 V SLA BATTERY
J3-103.05A J4-104.06A	2	UNV00002324	AMPHENOL CONNECTOR 7 PIN
J3-103.05B J3-103.08 J3-103.11 J3-103.14 J4-104.05 J4-104.08 J4-104.11 J4-104.14	8	UNV00005477	DT 3WAY RECEPTACAL
P3-103.05 P3-103.08 P3-103.11 P3-103.14 P4-104.05 P4-104.08 P4-104.11 P4-104.14	8	UNV00005481	DT 3WAY PLUG
J3-103.05 J4-104.06	2	UNV00017510	AMPHENOL CONNECTOR 7 PIN
J1-101.09 J1-101.09A J1-101.09B J1-101.10 J1-101.12 P1-101.09 P1-101.09A P1-101.09B P1-101.10 P1-101.12	10	UNV00001350	SOLAR CONNECTOR- MALE/FEMALE
CB1-101.17	1	UNV00001347	DIN RAIL MOUNT 150V DC 20A BREAKER
CB1-101.16	1	UNV00001791	MRCB 60A 12-48V BREAKER
CR1-101.20 CR2-102.06	2	UNV00013952	30A 24V 2NO CONTACT RELAY
EF2-102.05	1	UNV00011964	12" 24V Reversible Electric Fan
LT3-103.05 LT3-103.08 LT3-103.11 LT3-103.14 LT4-104.06 LT4-104.09 LT4-104.12 LT4-104.15	8	UNV00008125	60w COB wall pack 120/277 5600k bronze shell w/plastic shield
RM21-101.23	1	UNV00001332	DIGITAL CHARGE CONTROL METER
BC1-101.14	1	UNV00014438	24V 50 Amp Charger Converter Power Supply -
DV2-102.11	1	UNV00006500	Low Voltage Stem Mount Photocontrols - 24VDC 10A
IN2-102.18	1	UNV00006697	3000W Solar Power Inverter Off Grid 24V DC Voltage Converter
SP1-101.08 SP1-101.08A SP1-101.08B SP1-101.08C	4	UNV00005453	300W Solar Panel
SC1-101.23	1	UNV00006003	SOLAR CHARGE CONTROLLER 60 AMP UP TO 150 VDC INPUT, 12-48 VOLTS. 12V-800 WATTS
DV2-102.03	1	UNV00009886	10A 120V VENTAMATIC REPLACEMENT THERMOSTAT
DT2-102.20	1	UNV00012653	Programmable 7 Day, 24 hrs Timer 24V 16A Relay Switch, DIN mount 1 Channel
LVD1-101.21	1	UNV00012065	Low Voltage Disconnect Module LVD, 24V 30A
SS2-102.06	1	UNV00015512	30mm, 4-position, maintained, (2) N.O./(2) N.C. contact(s)
TG3-103.05 TG3-103.08 TG3-103.11 TG3-103.14 TG4-104.06 TG4-104.09 TG4-104.12 TG4-104.15	8	UNV00014856	TOGGLE SWITCH 10A
TG1-101.16	1	UNV00014267	300A CONTROL/DISCONNECT SWITCH
TB1 TB2	6	1492-CJ5-10	CENTER JUMPER
TB1 TB2	16	UNV00013971	TERMINAL BLOCK - ST 4
TB1 TB2	12	UNV00013970	TERMINAL BLOCK - ST 4 BU
TB1 TB2	8	UNV00013989	GROUND TERMINAL BLOCK - ST 4-PE
CBL3-103.05 CBL3-103.05B CBL4-104.06 CBL4-104.06A	4	UNV00002853	16/7 SOOW CABLE
CBL3-103.05A CBL3-103.08 CBL3-103.11 CBL3-103.14 CBL4-104.06B CBL4-104.09 CBL4-104.12 CBL4-104.12A CBL4-104.13 CBL4-104.15	80FT	UNV00007524	16/3 SOOW CABLE

LARSON ELECTRONICS

9419 E US HWY 175,
KEMP, TX 75143

TITLE: SPLT-1.06K-LM30-8XWP600E-AT-BC

DRAWN BY	DATE	REV
M.RAHMAN	6/17/2022	A
CHECKED BY	SHEET #	DRAWING #
K.NGUYEN	5 OF 7	105

TB1

Device1	Pin1	Wire1	Type1	T1	Number	T2	Type2	Wire2	Pin2	Device2	Jumper
TG1-101.16		101.16	RED_12 AWG		1		RED_20 AWG	101.16	IN	LVD1-101.21	
CR1-101.20			RED_12 AWG		2						
CR1-101.20			RED_12 AWG		3		RED_18 AWG			DV2-102.03	
SS2-102.07			RED_20 AWG		4		RED_20 AWG		V+ IN	DV2-102.11	
DT2-102.20	V+		RED_20 AWG		5		RED_20 AWG		NO	DT2-102.20	
IN2-102.18	24V+		RED_14 AWG		6						
CR2-102.06			RED_20 AWG		7		RED_20 AWG			SS2-102.07	
SS2-102.10			RED_20 AWG				RED_20 AWG			SS2-102.09	
CR2-102.06		102.15	BLK_12AWG		8		WIRES	102.15		TG3-103.05	
EF2-102.05	N		BLK_16AWG		9		BLK_20AWG			CR1-101.20	
BAT1-101.17A	-	101.14	BLK_6AWG		10		BLK_6AWG	101.14	-	BAT1-101.15A	
LVD1-101.21	GND	101.14	BLK_20AWG								
DV2-102.11	V-	101.14	BLK_20AWG		11		BLK_20AWG	101.14	V-	DT2-102.20	
CR2-102.06			BLK_22AWG		12		BLK_12AWG		24V-	IN2-102.18	
IN2-102.18	120VACN	102.16A	WIRES		13		WHT_12 AWG	102.16A			
J4-104.06	5	102.16A	WIRES		14						
IN2-102.18	PE	102.17	WIRES		15		GRN_12 AWG	102.17			
J4-104.06	6	102.17	WIRES		16						

LARSON ELECTRONICS

9419 E US HWY 175,
KEMP, TX 75143

TITLE: SPLT-1.06K-LM30-8XWP600E-AT-BC			
DRAWN BY: M.RAHMAN	DATE: 6/17/2022	REV: A	
CHECKED BY: K.NGUYEN	SHEET #: 6 OF 7	DRAWING #: 106	

TB2

Device1	Pin1	Wire1	Type1	T1	Number	T2	Type2	Wire2	Pin2	Device2	Jumper
J3-103.05A	1		WIRES		1		WIRES		1	J3-103.05B	
J3-103.05A	2		WIRES		2		BLK_16AWG		1	J3-103.08	
J3-103.05A	3		WIRES		3		BLK_16AWG		1	J3-103.11	
J3-103.05A	4		WIRES		4		BLK_16AWG		1	J3-103.14	
J4-104.06A	1		WIRES		5		BLK_16AWG		1	J4-104.05	
J4-104.06A	2		WIRES		6		BLK_16AWG		1	J4-104.08	
J4-104.06A	3		WIRES		7		BLK_16AWG		1	J4-104.11	
J4-104.06A	4		WIRES		8		BLK_16AWG		1	J4-104.14	
J3-103.05A	5		WIRES		9						
J3-103.05B	2		WIRES		10		WIRES		2	J3-103.08	
J3-103.11	2		WIRES		11		WIRES		2	J3-103.14	
J4-104.06A	5		WIRES		12						
J4-104.05	2		WIRES		13		WIRES		2	J4-104.08	
J4-104.11	2		WIRES		14		WIRES		2	J4-104.14	
J3-103.05A	6		WIRES		15						
J3-103.05B	3		WIRES		16		WIRES		3	J3-103.08	
J3-103.11	3		WIRES		17		WIRES		3	J3-103.14	
J4-104.06A	6		WIRES		18						
J4-104.05	3		WIRES		19		WIRES		3	J4-104.08	
J4-104.11	3		WIRES		20		WIRES		3	J4-104.14	

LARSON ELECTRONICS
9419 E US HWY 175,
KEMP, TX 75143

TITLE			
SPLT-1.06K-LM30-8XWP600E-AT-BC			
DRAWN BY	DATE	REV	
M.RAHMAN	6/17/2022	A	
CHECKED BY	SHEET #	DRAWING #	
K.NGUYEN	7 OF 7	107	