REV	DESCRIPTION	DATE
A	PRODUCTION RELEASE	01/19/2021

GVP-48-2L-LED-D-V2-1227-56K

LARSON ELECTRONICS®

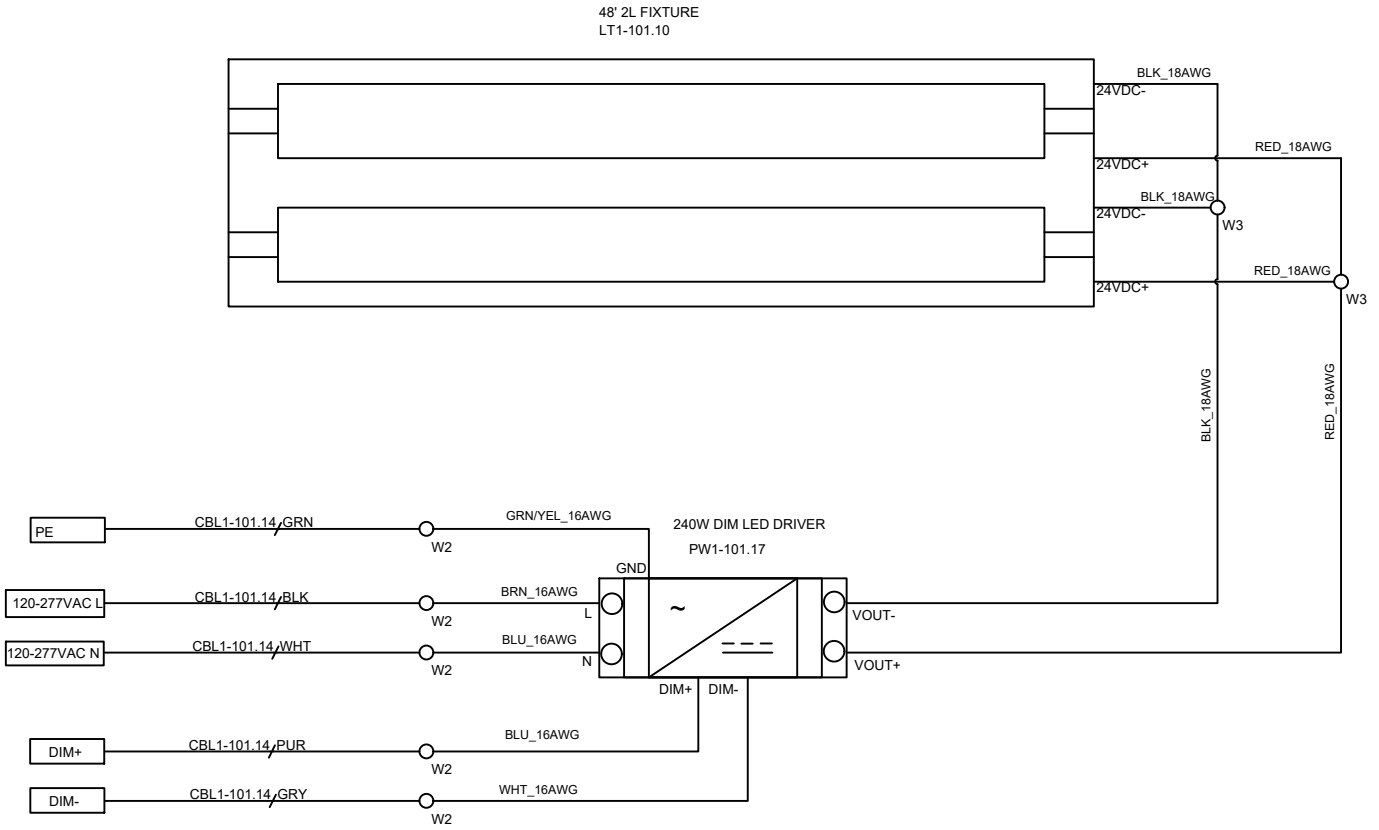

TAGS	QTY	CATALOG	DESCRIPTION
PW1-101.17	1	UNV00001773	LED DRIVER 110VAC-24VDC 240W DIMMABLE
LT1-101.10	1	UNV00004099	48' 2L LED FIXTURE FOR OUTDOOR
W3	2	UNV00011954	3 HOLE WAGO
W2	5	UNV00009802	2 HOLES WAGO
CBL1-101.14	1	UNV00005745	16/5 SOOW

LARSON ELECTRONICS
9419 E US HWY 175,
KEMP, TX 75143

TITLE: GVP-48-2L-LED-D-V2-1227-56K

DRAWN BY	DATE	REV
K.NGUYEN	01/19/2021	A
CHECKED BY	SHEET #	DRAWING #
P.CRYER	1 OF 1	101