Connection Diagram (Refer to the diagrams below for connecting the transformer. Choose the type that resembles your transformer.)

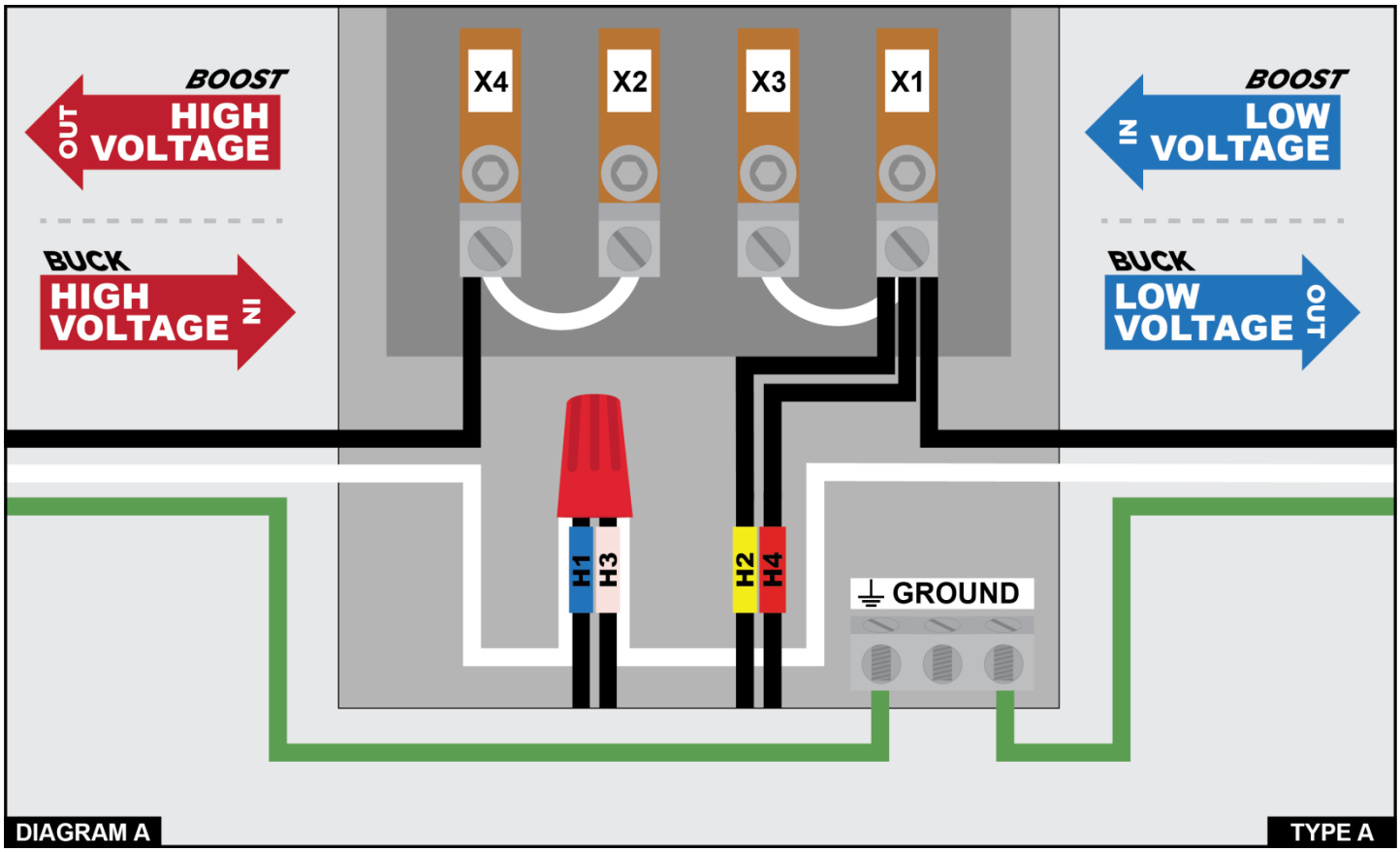

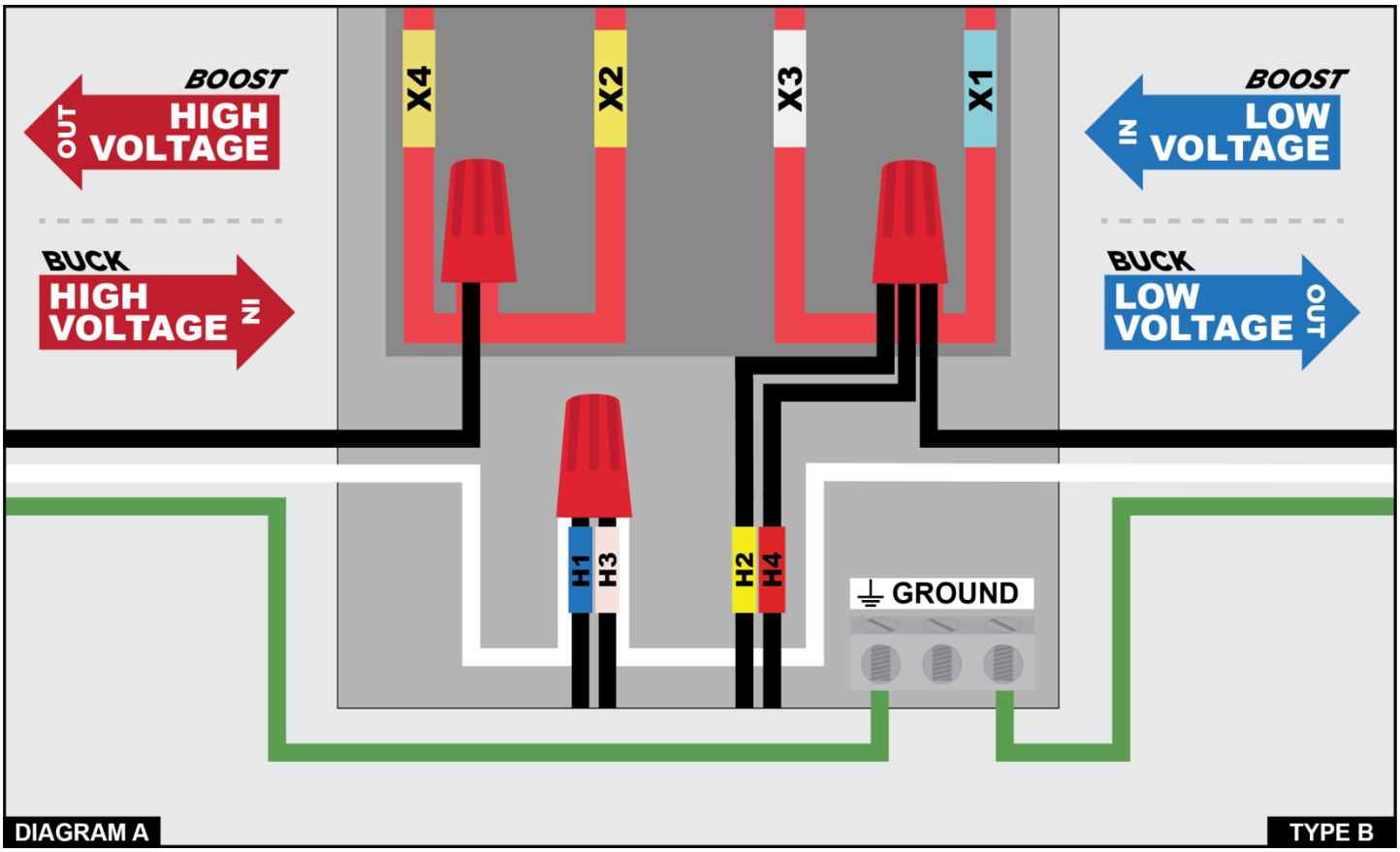

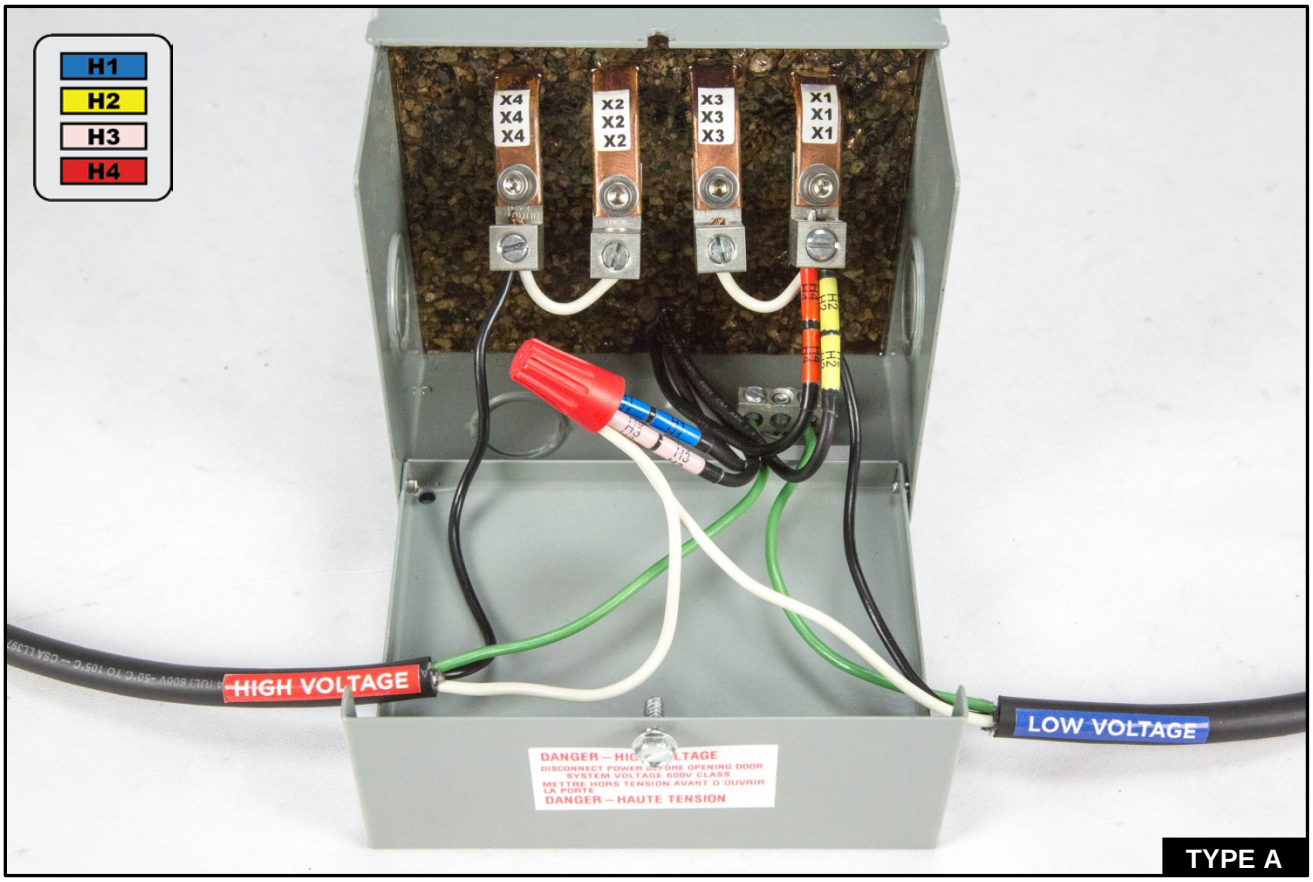
H1
H2
H3
H4
X4 X4 X4
X2 X2 X2
X3 X3 X3
X1 X1 X1
HIGH VOLTAGE
LOW VOLTAGE
DANGER – HAUTE TENSION

TYPE A

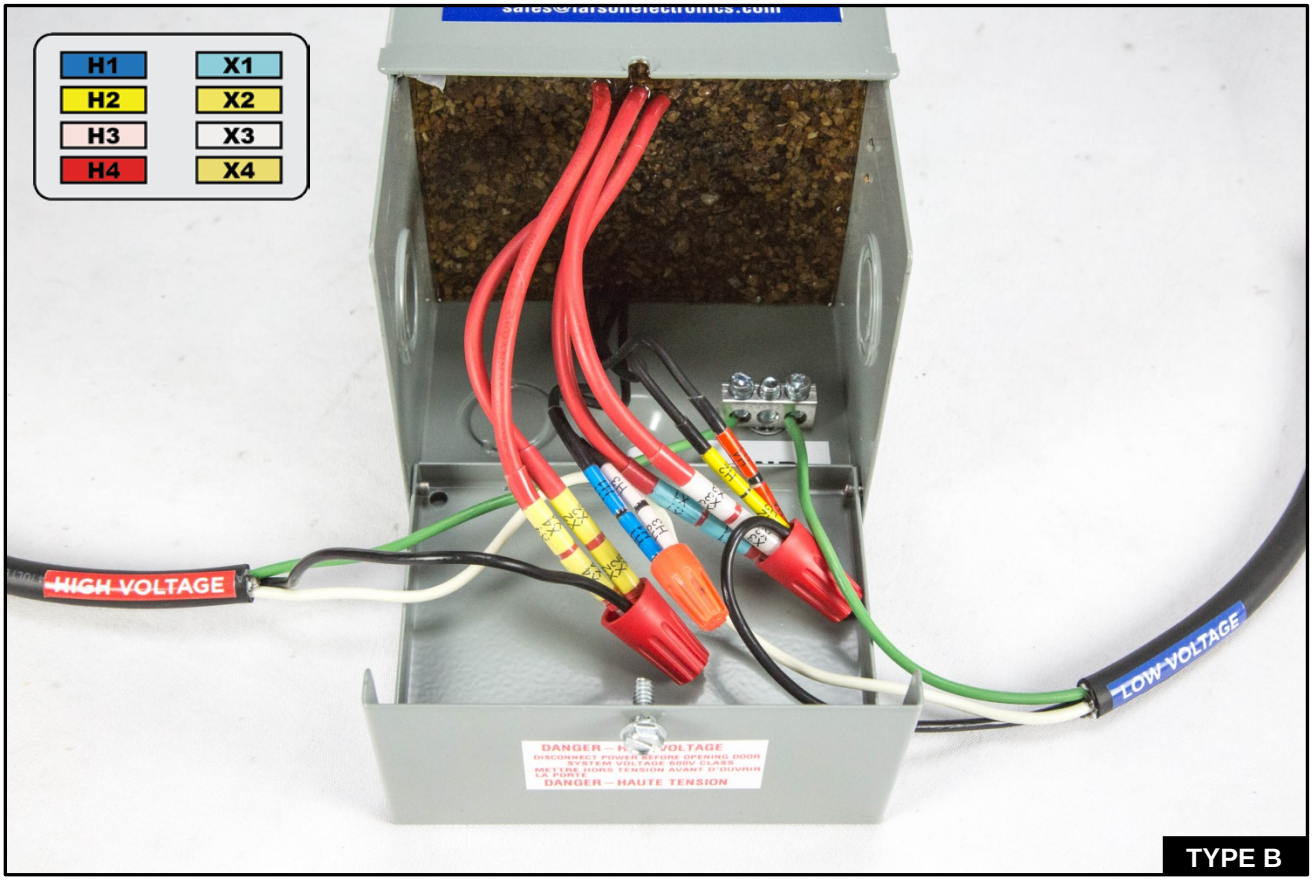
H1
H2
H3
H4
X1
X2
X3
X4
HIGH VOLTAGE
LOW VOLTAGE
DANGER – HAUTE TENSION

TYPE B

Wiring Diagram

WARNING: *DO NOT SERVICE WHILE ENERGIZED!* ***Tip: Use a voltmeter to check voltage!***

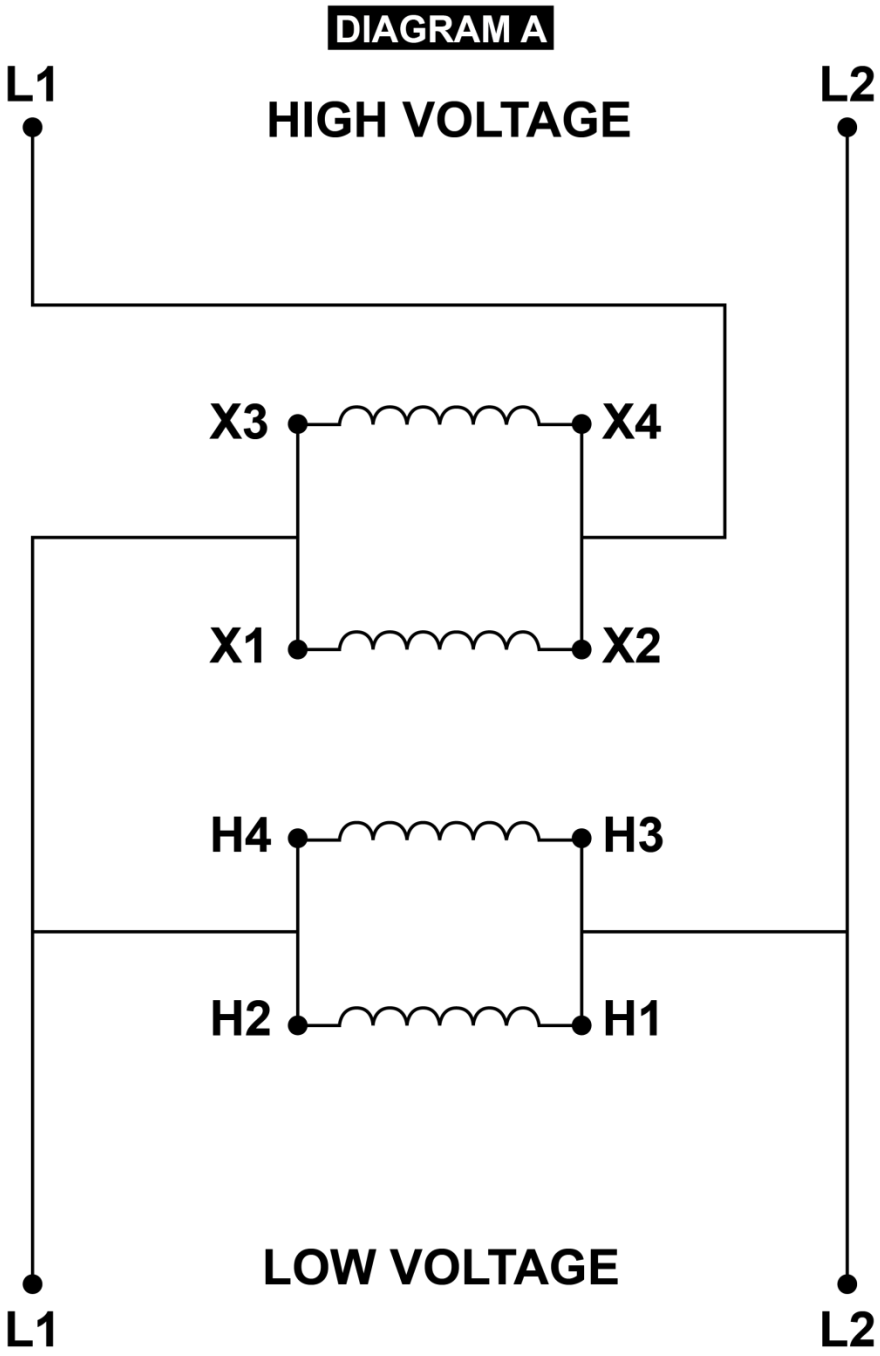

Connection Guide:

1. Connect **X4** and **X2** together
2. Connect High Voltage **L1** to **X4** and **X2**
3. Connect **X3** and **X1** together
4. Connect Low Voltage **L1** to **X1, X3, H4, H2**
5. Connect High & Low Voltage **L2** to **H1** and **H3**