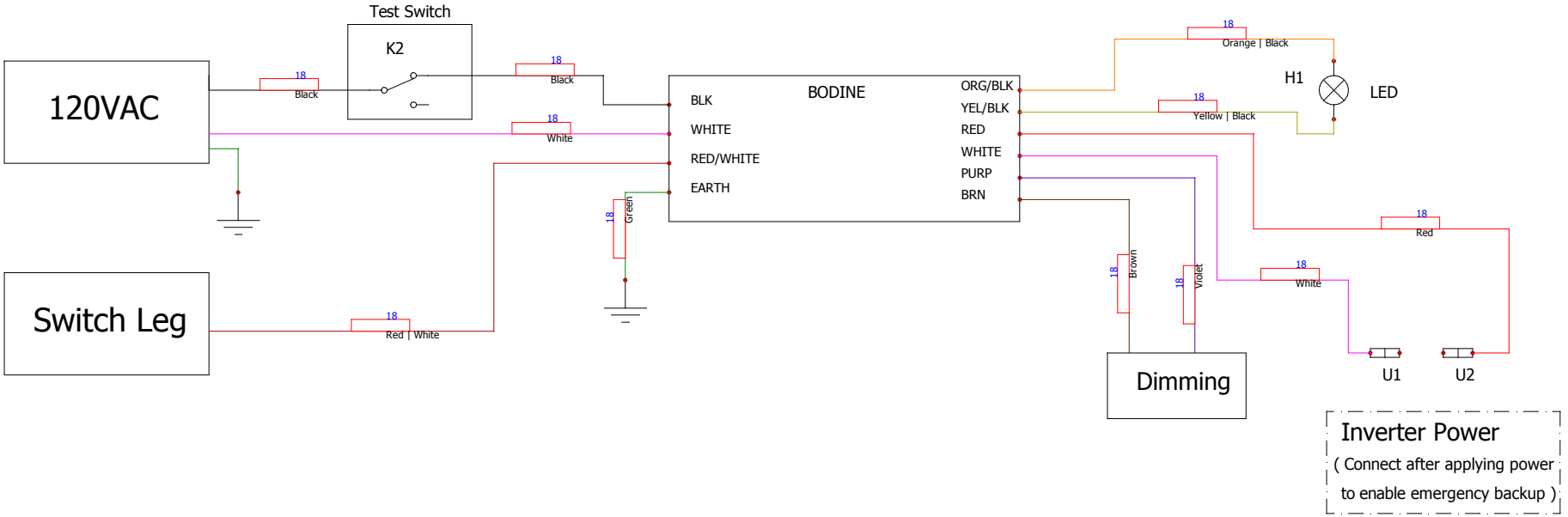

Larson Electronics 9419 E US HWY 175, Kemp, TX 75143	Power	REVISION 0
CONTRACT:	LOCATION: L1 Main electrical closet	SCHEME 03

REV.	DATE	NAME	CHANGES
0	1/25/2019	pcryer	

HAL-EMG-KNL-26W-LED

User data 2

SOLIDWORKS Electrical

Document realized with version : 2016.0.0.114