REV	DESCRIPTION	DATE
A	PRODUCTION RELEASE	06-04-2021

VPLHL-7WLED-PC-GR30-1227

LARSON ELECTRONICS®

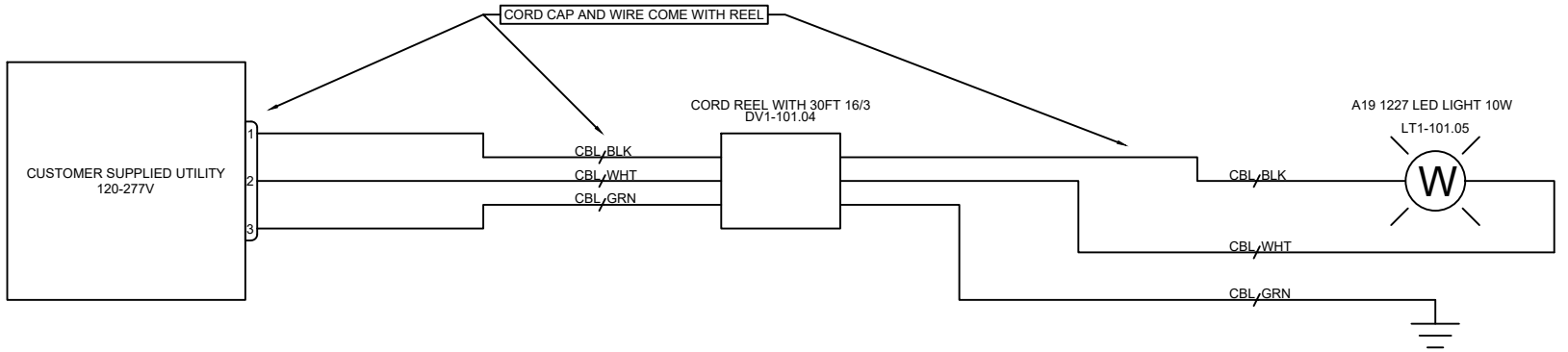

TAGS	QTY	CATALOG	DESCRIPTION
DV1-101.04	1	UNV00003689	reel with 30' 16/3 white cord with triple outlet
LT1-101.05	1	UNV00006091	10W A19 LED BULB 56K STEADY BURN

LARSON ELECTRONICS
9419 E US HWY 175,
KEMP, TX 75143

TITLE			
VPLHL-7WLED-PC-GR30-1227			
DRAWN BY	DATE	REV	
R.BLACK	06-04-2021	A	
CHECKED BY	SHEET #	DRAWING #	
P.CRYER	1 OF 1	101	