REV	DESCRIPTION	DATE
A	PRODUCTION RELEASE	4/22/2025

LEDWL-STRB-BLUE-1224

LARSON ELECTRONICS®

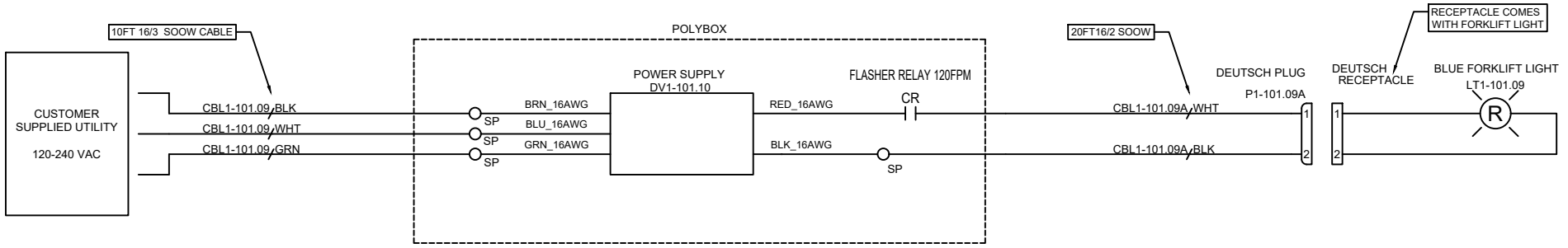

TAGS	QTY	CATALOG	DESCRIPTION
P1-101.09A	1	UNV00005480	DTCH PLUG 2 WAY
CR1-101.09	1	UNV00016015	SOLID STATGE FLASHER
LT1-101.09	1	UNV00005003	BLUE - 4LED Blue forklift Light
DV1-101.10	1	UNV00018001	DCP POWER SUPPLY 100-240VAC/12 VDC,1.0A
CBL1-101.09A	1	UNV00002075	16/2 SOOW CABLE
CBL1-101.09	1	UNV00009083	16/3 SOOW CABLE

LARSON ELECTRONICS
9419 E US HWY 175,
KEMP, TX 75143

TITLE			
LEDWL-STRB-BLUE-1224			
DRAWN BY	DATE	REV	
A.HIRSH	4/22/2025	A	
CHECKED BY	SHEET #	DRAWING #	
S.DESA	1 OF 1	101	