REV	DESCRIPTION	DATE
A	PRODUCTION RELEASE	2-7-2020

EPLCD-48-2L-LED-100-1227-5600K-1523

LARSON ELECTRONICS®

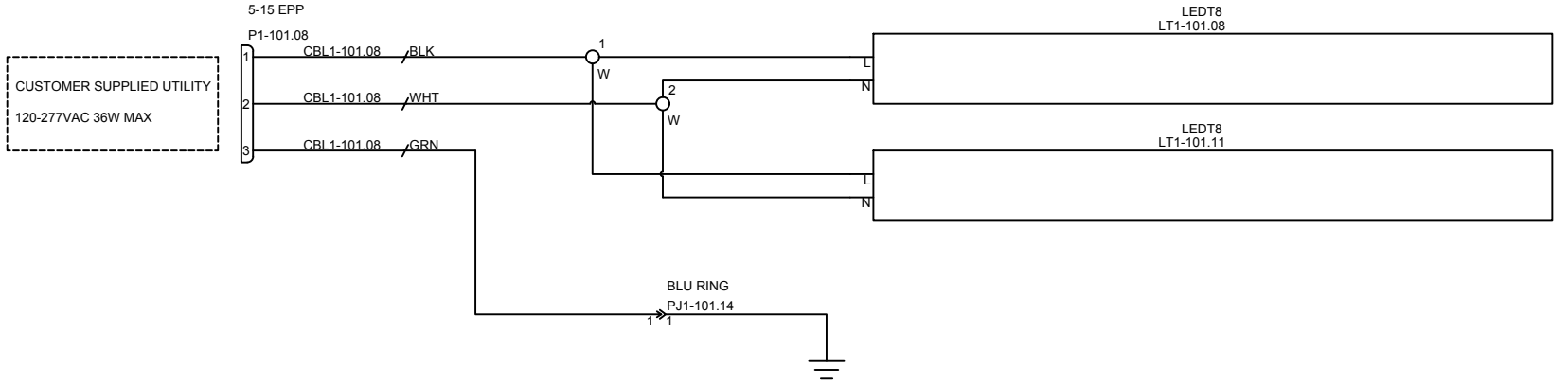

TAGS	QTY	CATALOG	DESCRIPTION
P1-101.08	1	UNV00005389	EXPLOSION PROOF PLUG - 5-15 15A 125V
PJ1-101.14	1	UNV00008177	BLUE RING TERMINAL - SMALL
LT1-101.08 LT1-101.11	2	UNV00008094	4FT T8 LED 5600K 120/277VAC
W	2	UNV00011954	3 CONDUCTOR LEVER CLAMP WAGO
CBL1-101.08	100FT	UNV00007524	CORD 16/3 SOOW UL 90C BLK

LARSON ELECTRONICS

9419 E US HWY 175,
KEMP, TX 75143

TITLE: EPLCD-48-2L-LED-100-1227-5600K-1523

DRAWN BY	DATE	REV
P.CRYER	02-07-2020	A
CHECKED BY	SHEET #	DRAWING #
S.DESAI	1 OF 1	101