| REV | DESCRIPTION | DATE |
|---|---|---|
| A | PRODCUTION RELEASE | 9/6/2022 |

# TPM-LED-L2X4-25CC-1227-FL

LARSON ELECTRONICS®

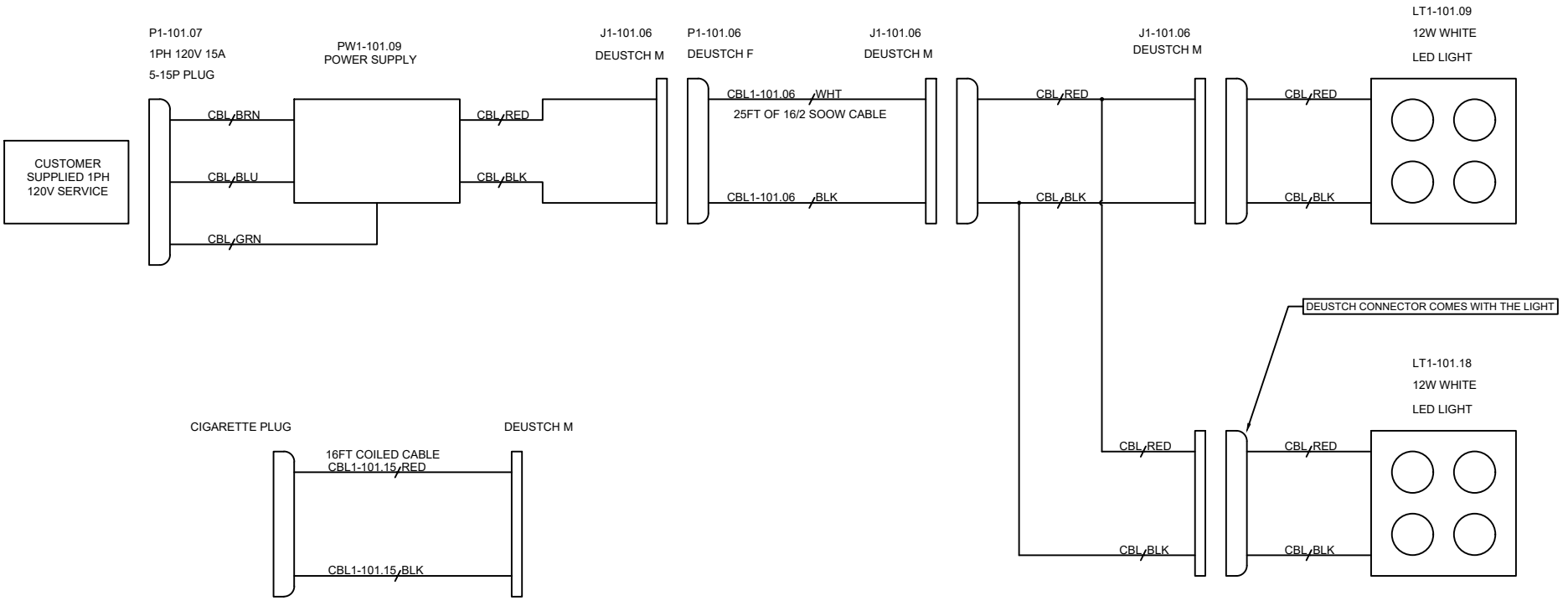


| TAGS | QTY | CATALOG | DESCRIPTION |
|---|---|---|---|
| P1-101.06 | 1 | UNV00005476 | 2WAY DEUTSCH-FEMALE |
| J1-101.06 | 3 | UNV00005480 | 2 WAY DEUTSCH MALE |
| P1-101.07 | 1 | UNV00006731 | PLUG , STRAIGHT BLADE 15A, 125V NEMA 5-15 |
| LT1-101.09<br>LT1-101.18 | 2 | UNV00010737 | 4" 4X3W LED FLOOD 60K |
| PW1-101.09 | 1 | UNV00005984 | 120-12V 5A 80W AC-DC LED SUPPLY |
| CBL1-101.06 | 1 | UNV00007371 | CORD 16/2 SOOW UL 90C BLK CABLE |
| CBL1-101.15 | 1 | UNV00007637 | 16 FT 16/2 ROUND WIRE COIL CORD WITH DEUTSCH MALE CONNECTOR |

LARSON ELECTRONICS
9419 E US HWY 175,
KEMP, TX 75143

| TITLE | | | |
|---|---|---|---|
| TPM-LED-L2X4-25CC-1227-FL | | | |
| DRAWN BY | DATE | REV | |
| S.DESAI | 9/6/2022 | A | |
| CHECKED BY | SHEET # | DRAWING # | |
| K.NGUYEN | 1 OF 1 | 101 | |