Larson Electronics LLC
9419 E US HWY 175, Kemp, TX 75143
Phone: 800.369.6671

www.LarsonElectronics.com
Email: sales@LarsonElectronics.com
Fax: 903.498.3364

GAU-LTL-400W-LED

400 Watt High Mast (Stadium) LED Light - 60,000 Lumens - 120-277 - Outdoor Rated

Product ID: 73035



Larson Electronics LLC manufactures a wide variety of products, including custom built to spec designs. The pictures displayed for this unit are a general representation of form factor for the product line and may not accurately represent this exact configuration in every detail due to custom builds and changes between similar products in our standard catalog. The specifics for this configuration are listed in the specification table and supporting documentation (CAD files, Dimensional Drawing, Name Plate Diagram, Wiring Diagram, etc.). This means that specific details (receptacles, plugs, wires, connections, mounting brackets, external finishes, etc.) may not be accurately represented in images vs specifications. Please review specifications and do not order based solely on images.

GAU-LTL-400W-LED High Mast LED Light
Lamp Type: CREE® LED
Dimensions: 22.92"-L x 14.51"-W x 5.153"-D
Weight: 56.81 Lbs
Total Watts: 400
Total Lumens: 54,000
Luminous Efficiency: 135 lm/w
Beam Configurations: 10° Spot, 24° Wide Spot, 38° Narrow Flood, 60° Flood, or 90° Wide Flood
LED Color Temperature: Cool White - 5500-6500K
LED Life Expectancy: 80,000 hours
Optics Efficiency: 98% - PMMA High Transmittance Optics
Led Drive %: 90%
Voltage:120-277 VAC
Amp Draw: 5A @ 120V, 2.5A @ 240V, 2.67A @ 277V
Wiring: 2.5` Pigtail w/ Flying Leads
Mounting: Flat Surface Trunnion Mount U-Bracket
Materials: Die Cast Aluminum Housing, PMMA Optics
Housing Color: Powder Coated Black
Ambient Temperature Range: -40°C to +80°C
Waterproof Rating: IP67

Quick Summary
800 Watt Metal Halide Replacement
Ambient Op Temp -40C to +80C
Ideal for Light Towers & LED Retrofits
98% Transmission High Purity PMMA Optics
Multiple LED Banks for Heat Dispersion
135 Lumens Per Watt Efficiency
70% Lumen Retention after 80,000 Hours
UL1012 Compliant
UL60950-1 Compliant
CE Certified
RoHS Compliant
IP67 Rated Waterproof

Special Orders- Requirements
Contact us for special requirements

Toll Free: 1-800-369-6671
Intl: 1-214-616-6180
Fax: 1-903-498-3364
E-mail: sales@larsonelectronics.com

The GAU-LTL-400W-LED High Mast (Stadium) LED Flood Light offers intense light output and is ideal for flood lighting, high mast lighting, light towers, as well as industrial and outdoor lighting applications. Producing 54,000 lumens, a 4.25 amp draw at 120V, 80,000 hour service life, 120-277 volt compatibility, and IP67 waterproof rating, this LED flood light provides operators with a

rugged and powerful LED alternative to 1500 watt metal halide lamps that uses little power and can withstand rugged use and abusive conditions.
The GAU-LTL-400W-LED LED light from Larson Electronics produces 54,000 lumens of high intensity light while drawing only 400 watts at 5 amps from a 120 volt electrical system. Fourty-Eight CREE® high output LEDs producing 1,125 lumens each are arranged in rows and paired with PMMA high purity optics to produce a well focused 24° wide spot beam that is ideal for providing far reaching concentrated illumination while still covering a substantial amount of area. We also offer optional optics with 10° spot, 38° narrow flood, 60° flood, and 90° wide flood beam spreads. The spot beams are tightly focused and are designed for high elevation mounting to achieve distance, making spot versions ideal for high mast and spots lighting. The flood beams are designed to provide more light over a larger area nearer the fixture, making flood versions ideal for use as dedicated work and area lights.

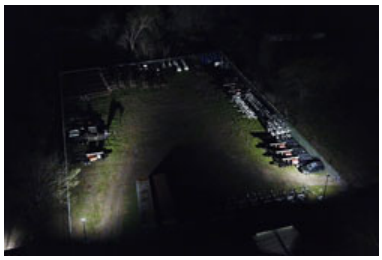
Click Photo to Enlarge


Click Photo to Enlarge

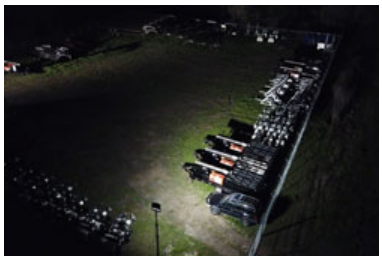
Click Photo to Enlarge

GAU-LTL-400W-LED lights are ideal replacements for fragile and hot running 800 watt metal halide lamps. They offer low power requirements, high durability and a versatile mounting system that makes these LED light emitters a superior lighting solution for demanding applications where power and reliability is critical. The heavy duty design and high power of these LED lights also makes them suitable for a wide array of applications including but not limited to: high mast lighting, light towers, light plant LED retrofits, military, mining, industrial manufacturing, machine visioning, security and law enforcement, commercial structure illumination, sport complexes, billboards, race tracks, and parking lots to name a few.

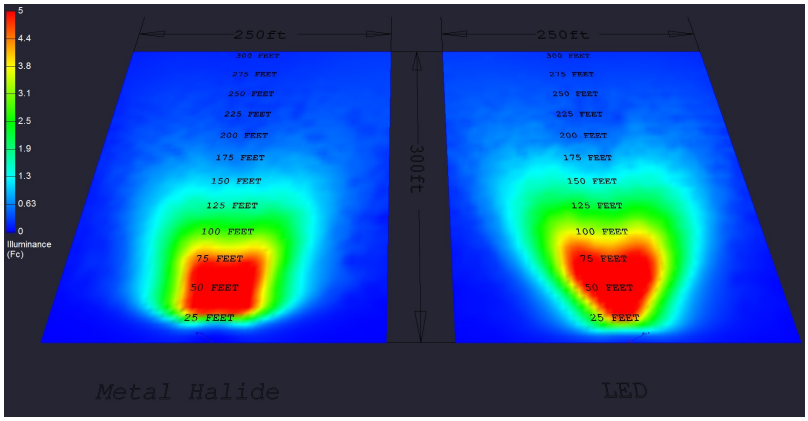

Click Photo to Enlarge

The above image shows the comparison of the traditional (4) 1500 watt metal halides light fixtures mounted to a 30` light tower (left) to (4) GAU-LTL-400W-LED 400 watt LED light fixtures mounted to a 30` light tower. The area being illuminated by each tower is 300` in length and 250` in width. Unlike the metal halide light fixtures, there are no hot spots with these LED fixtures. This high output LED light fixture provides an even beam spread over the targeted work area without overcast, glare, light spillage, and wasted illumination. Color rendering is also increased with LED light plants, providing a more realistic night vision that more closely resembles natural daylight illumination.

Heat Management: Heat is the single largest factor in premature LED failure and color shifting. These LED units feature individual heat sinks per bank of six LEDs to control heat buildup rather than utilizing a single housing to dissipate heat. This allows for more thorough cooling of the LEDs for extended operating periods. This allows the LEDs to be driven at up to 90% capacity without overheating or visible loss of light output. The end result is more light with less heat and longer LED life with an average 70% lumen maintenance after 80,000 hours.



In-use Image of GAU-LTL-400W-LED Mounted

Durability: As well as unparalleled heat control, the GAU-LTL-400W-LED series of LED lights from Larson Electronics also offer IP67 rated construction that is designed to withstand extremes of environmental and operating conditions. These units can withstand rapid temperature changes of -40° Celsius to +80° Celsius, are waterproof, and resist ingress of dust, dirt and humidity. The housings are formed from die cast aluminum and the optics are high transmission PMMA with 98% light transmittance. The CREE® LEDs help these units achieve resistance to vibrations and are rated at 70% lumen maintenance after 80,0000 hours of use. We recommend these LED lights for use in applications where a lot of vibration, dust, dirt, dampness and abusive working conditions are encountered.

Mounting: Each unit is equipped with a back mount trunnion style mounting bracket that allows the light to be attached to flat surfaces and adjusted through 160° of vertical movement. To adjust the unit after mounting, the user simply loosens the set screws located on either side of the unit, moves it into the desired position, then re-tightens the screws. The base of the mounting trunnion is equipped with several machined slots which allow users to utilize existing mounting holes and slide the unit for precise mount positioning.

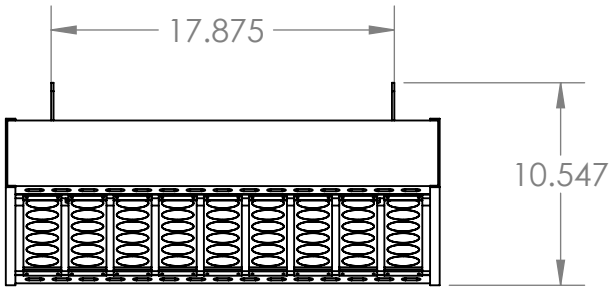

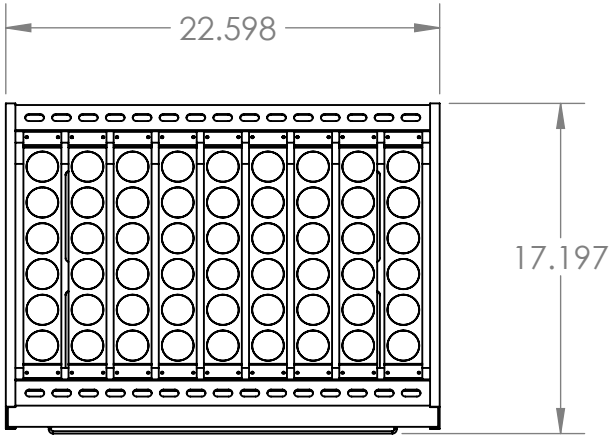

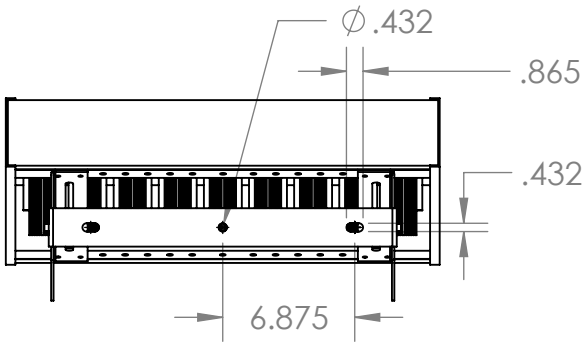

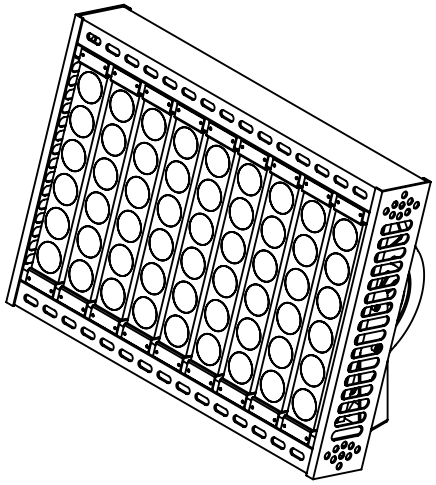

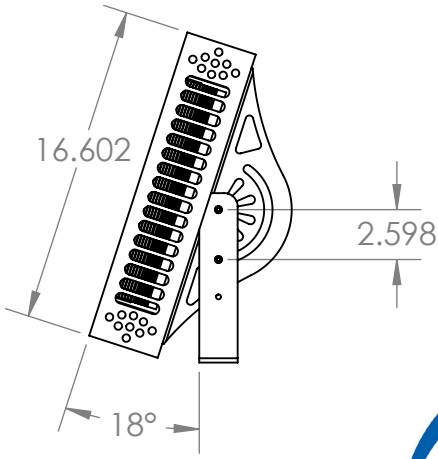

Larson Electronics

TITLE:

GAU-LTL-400W-LED

PROPRIETARY AND CONFIDENTIAL
THE INFORMATION CONTAINED IN THIS DRAWING IS THE SOLE PROPERTY OF LARSON ELECTRONICS LLC. ANY REPRODUCTION IN PART OR AS A WHOLE WITHOUT THE WRITTEN PERMISSION OF LARSON ELECTRONICS LLC IS PROHIBITED.

		NAME
DIMENSIONS ARE IN INCHES	DRAWN	CHRIS THAUER
MATERIAL	CHECKED	JEREMY BLANKENSHIP
DO NOT SCALE DRAWING		

SIZE	DWG. NO.	REV
A		

SCALE: 1:10 SHEET 1 OF 1

5 4 3 2 1







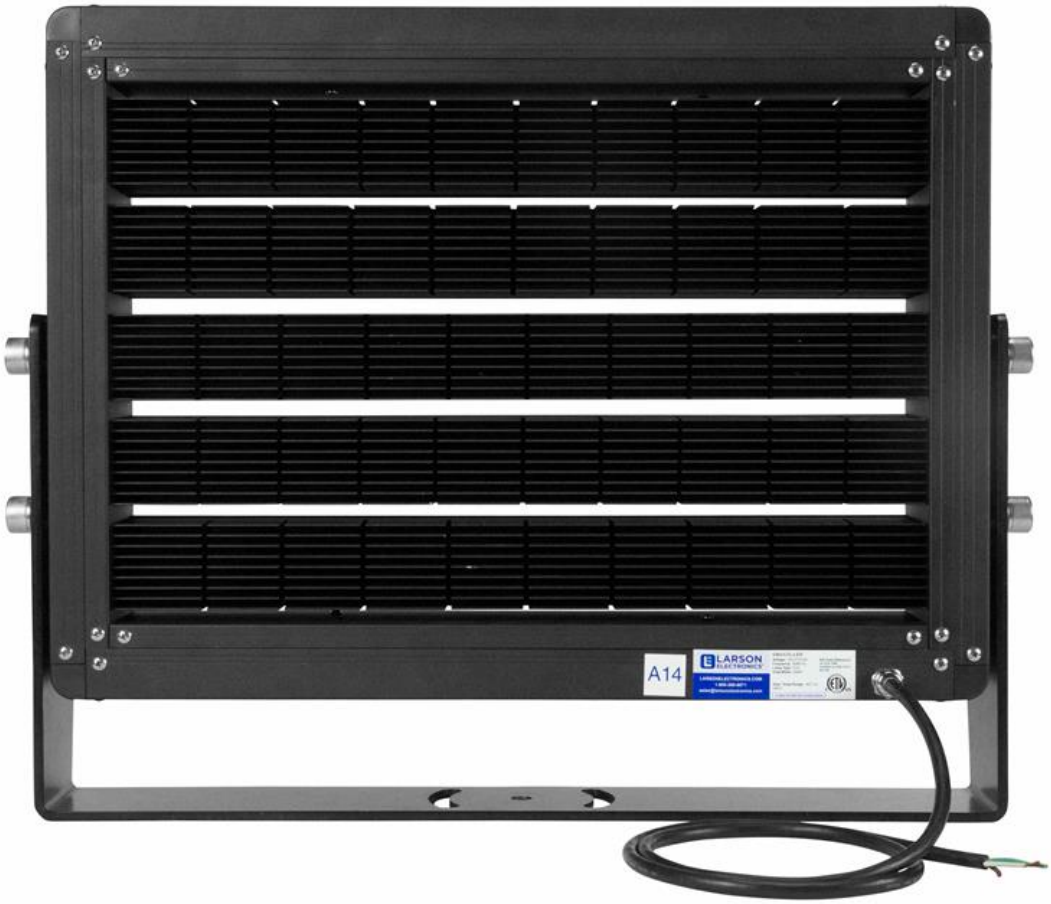
A14
LARSON
ELECTRONICS

Frequently Asked Questions (FAQ)