Larson Electronics LLC
9419 E US HWY 175, Kemp, TX 75143
Phone: 800.369.6671

www.LarsonElectronics.com
Email: sales@LarsonElectronics.com
Fax: 903.498.3364

HAL-QP-1X1000MH-ILS

1000 Watt Hazardous Area Light Tower - Quadpod Mount - Metal Halide Light - Inline Switch - C1D2

Product ID: 71435

Larson Electronics LLC manufactures a wide variety of products, including custom built to spec designs. The pictures displayed for this unit are a general representation of form factor for the product line and may not accurately represent this exact configuration in every detail due to custom builds and changes between similar products in our standard catalog. The specifics for this configuration are listed in the specification table and supporting documentation (CAD files, Dimensional Drawing, Name Plate Diagram, Wiring Diagram, etc.). This means that specific details (receptacles, plugs, wires, connections, mounting brackets, external finishes, etc.) may not be accurately represented in images vs specifications. Please review specifications and do not order based solely on images.

HAL-QP-1X1000MH-ILS
Lamp Type: 1X Metal Halide
Dimensions: Telescoping- 7 to 12`
Total Watts: 1000
Watts Per Lamp: 1000
Voltage: 120V
Lighting Configuration: Flood Pattern

Mounting: Telescoping Light Tower Wheeled Quadpod Base

Weight: 105lbs

Total Coverage: 40,000 Sq. Feet

Wiring: 25` SOOW Cable w/ Inline Switch

U.L. Listing: Wet Area / Marine Environment Approved

U.L Ratings
U.L Rated for Wet Area Use
Class 1 Division 2 Groups A, B, C and D
U.L Approved Marine Environments
T1 Temp Rating
Inline on/off switch

Special Orders - Special Requirements
Contact us for special requirements

Intl: 1-903-270-1187

Toll Free: 1-800-369-6671

Fax: 1-903-498-3364

E-mail: sales@larsonelectronics.com

Made in the USA

The Larson Electronics HAL-QP-1X1000MH-ILS hazardous area light tower with inline switch carries one 1000 watt metal halide lamp capable of illuminating an area 40,000 square feet in size. This portable light tower is rated Class 1 Division 2 Groups A, B, C and D as well as wet area and marine environment suitable and is equipped with an inline on/off switch and terminated in an explosion proof plug.

PLEASE NOTE: ANY FREE SHIPPING OFFERS DO NOT APPLY TO LIGHT MASTS, LIGHT TOWERS, OR QUADPODS

The HAL-QP-1X1000MH-ILS hazardous area light tower provides operators in hazardous locations with a versatile lighting solution for operations where easily managed large scale illumination of the workspace is required. One 1000 watt metal halide lamp provides light coverage for 40,000 square feet of work area while a Class 1 Division 2 Groups A, B, C and D NTRL Listing assures reliable protection against inadvertent ignitions. This light tower can be extended from 7 to 12 feet in height and the aluminum quadpod includes wheels for easy placement of the tower.

This light tower is constructed of aluminum and provides for both height adjustment and leg placement assuring a steady and stable platform. Included with this unit is one 1000 watt metal halide lamp, a Class 1 Division 1 inline on/off switch, and 25 feet of abrasive and oil resistant SOOW cord terminating in an ECP 1523 5-15P Class 1 Division 1 explosion proof straight blade plug. The explosion proof light fixture can be removed by releasing the hand knob and sliding the light

and mounting bracket off of the quadpod center support while the legs can be collapsed, aiding in deployment, storage and transport. This tower is rated for use in wet areas and marine environments and operates on 120 VAC.

REV	DESCRIPTION	DATE
A	PRODCUTION RELEASE	10/16/2024

HAL-QP-1X1000MH-ILS

LARSON ELECTRONICS®

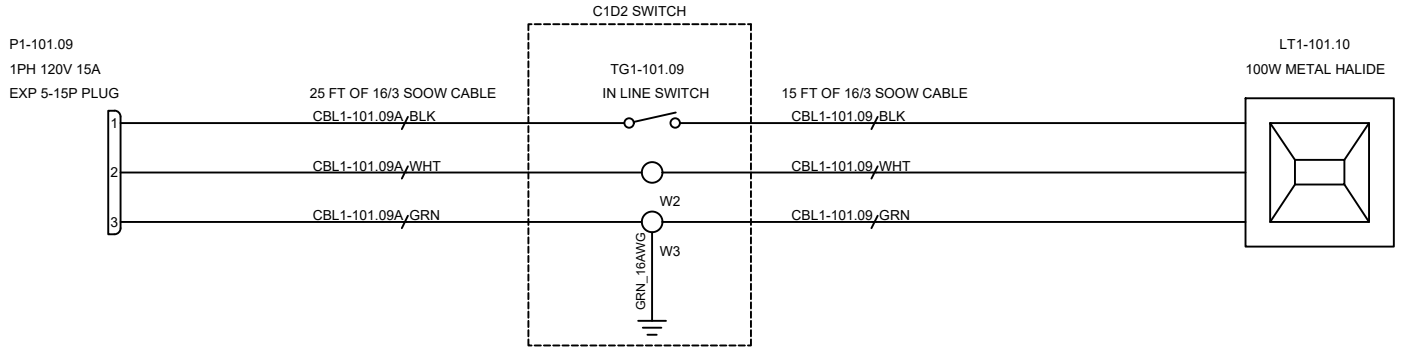

TAGS	QTY	CATALOG	DESCRIPTION
P1-101.09	1	UNV00005389	EXPLOSION PROOF 125V 15A PLUG
LT1-101.10	1	UNV00004131	1000W METAL HALIDE LAMP C1D2 MULTI VOLTAGE
TG1-101.09	1	UNV00005436	1P 20A EXP PROOF TUMBLER SWITCH
CBL1-101.09	1	UNV00007524	CORD 16/3 SOOW UL 90C BLK CABLE

LARSON ELECTRONICS
9419 E US HWY 175,
KEMP, TX 75143

TITLE			
HAL-QP-1X1000MH-ILS			
DRAWN BY	DATE	REV	
S.Desai	10/16/2024	A	
CHECKED BY	SHEET #	DRAWING #	
J.Maldonado	1 OF 1	101	

Frequently Asked Questions (FAQ)