Larson Electronics LLC
9419 E US HWY 175, Kemp, TX 75143
Phone: 800.369.6671

www.LarsonElectronics.com
Email: sales@LarsonElectronics.com
Fax: 903.498.3364

LED25WRE

25 Watt High Intensity LED Light - 12-32V DC - 1000ft Spot Beam - 4.5"OD Light Head

Product ID: 70983



Larson Electronics LLC manufactures a wide variety of products, including custom built to spec designs. The pictures displayed for this unit are a general representation of form factor for the product line and may not accurately represent this exact configuration in every detail due to custom builds and changes between similar products in our standard catalog. The specifics for this configuration are listed in the specification table and supporting documentation (CAD files, Dimensional Drawing, Name Plate Diagram, Wiring Diagram, etc.). This means that specific details (receptacles, plugs, wires, connections, mounting brackets, external finishes, etc.) may not be accurately represented in images vs specifications. Please review specifications and do not order based solely on images.

LED25WRE LED Light
Lamp Type: CREE LED
Dimensions: 5.75" x 4.36"
Watts: 25
Led Drive %: 90%
Voltage: 12-32 V DC
Spot Beam: 1000` L
Lighting Configuration: Combination 10° Spot & 60° Flood
Mounting: Adjustable Bracket
Wiring: Deutsch IPD / LADD DT04-2P connector
Amps: 2.08 @ 12V DC - 1.04 @ 24V DC
Lumens: 2750
LED Light Color: 6000K
LED Life Expectancy: 50,000 hours
Materials: Aluminum Housing, Polycarbonate Lens
Housing Colors: Black or White

3 year warranty replacement on this LED light. After 30 days, the customer ships the failed LED light and/or LED bulb to Larson Electronics at their expense. If the failure is a manufacturer defect, we will ship a new replacement to the customer. If failure occurs within 30 days of receipt, Larson Electronics will provide a return label via email to the customer. When the failed light is returned, Larson Electronics will ship a new replacement.

Internal LED Driver Features
Fast average current control
Programmable off-time switching
Linear dimming input
Short Protection w/ Skip Mode
Ambient Op Temp -40C to +85C
Pin-compatible with the HV9910B
CE Certified
View Avg-Mode Driver Control PDF

Special Orders- Requirements
Contact us for special requirements
Toll Free: 1-800-369-6671
Intl: 1-903-270-1187
Fax: 1-903-498-3364
E-mail: sales@larsonelectronics.com

Buy American Compliant

The LED25WRE LED Spotlight is ideal for a wide variety of uses including equipment, vehicle, military, law enforcement and industrial manufacturing applications. This ultra compact LED light produces an 2750 lumen output with low voltage and amp draw, 50,000 hour

service life and 12 to 32 volt compatibility providing operators with a versatile and powerful LED lighting solution.

The LED25WRE LED light emitter from Larson Electronics produces 2750 lumen of bright light while drawing less than 2.25 amps from a 12 volt electrical system. A single CREE 25 watt LED producing 2750 lumen is combined with high output reflector to produce a narrow 10 degree spread spot beam approximately 1000’ long combined with a 60° flood beam. This combination spot and flood beam provides both distance and width from a single light source. This particular unit is ultra compact at 4.5" OD lamp head, 5.75 inches tall with mounting bracket, which makes it ideal for applications where electrical power and mounting space is at a premium.

The LED WRE series LED lights are waterproof to 3 meters, sealed against intrusion by dust and dirt and very ruggedly constructed to withstand the most demanding environments, conditions and applications. The low profile design, low power requirements, high durability and versatile mounting makes these LED lights ideal for a wide array of applications including but not limited to: military, industrial manufacturing, machine visioning, security and law enforcement, boating, off-roading and commercial structure illumination.



This photo shows an open parking lot lit only by ambient light at approximately 9:00 pm`.

Click Photo to Enlarge



This photo shows the LED25WRE in spot configuration. The building in the distance is 300` away, well illuminated by the LED spotlight.

Click Photo to Enlarge

Heat Management: Heat is the single largest factor in premature LED failure and color shifting. These LED units contain advanced drivers which use pulse width modulation to control heat buildup rather than simple voltage regulators which are typically harsh on sensitive electronics and can contribute to early LED failure. These units automatically sense the temperature of each LED and adjust the energy frequency or “duty cycle” accordingly to maintain heat levels within acceptable ranges. This system in essence flashes current at an extremely fast on and off rate to each LED based upon the LED’s core temperature. This flash rate is too fast to detect with the human eye, but provides precise control of the current flowing to each LED and thus the heat it generates. This allows the LEDs to be driven at up to 100% capacity without overheating or visible loss of light output. The LEDs are always driven at the same voltage but the duty cycle, however, is changed to alter how long the LEDs are actually on or off. The end result is more light with less heat and longer LED life with an average 70% lumen maintenance after 50,000 hours.

Voltage: These units are also able to monitor and adjust input current to maintain the correct LED voltage levels regardless of input levels across a specific range. These LEDP WRE series LED lights can operate on current ranging from 12 to 32VDC without any modifications necessary as a result. This ability to sense and adjust input current also provides protection against voltage spikes and drops that can occur in vehicle electrical systems which would otherwise result in burning up or premature LED failure without it.

Durability: As well as unparalleled heat control, the LEDP WRE series of LED lights from Larson Electronics also offer IP68 rated construction that is designed to withstand extremes of environmental and operating conditions. These units can withstand rapid temperature changes of -40 degrees Celsius to 85 degrees Celsius, are waterproof to three meters and resist ingress of dust, dirt and humidity. The housings are formed from extruded aluminum and the lenses are unbreakable polycarbonate. The CREE LEDs offer resistance to shocks and

vibrations and are rated at 70% lumen maintenance after 50,0000 hours of use. **Mounting:** These LEDP WRE series LED lights feature a smaller profile and lighter weight than our LEDLB-E series lights, making them ideal for use in locations where traditional lights cannot fit or would block other mounted equipment. The LEDP1X10WRE is suspended within a form fitting trunnion (yolk-type) mount. This trunnion mount has two knurled knobs that can be loosened, allowing the LED light to be adjusted and then retightened to lock the light into any desired position once mounted. A single stainless steel stud protrudes from the bottom of the mount, enabling the operator to install the light using a simple through-hole mount, allowing the unit to be installed anywhere a 1/2-inch hole can be drilled. **Note:** Most Larson Electronics LEDLB, LEDP3W, LEDP10W, LED10W, and LEDP WRE series LED spotlights and floodlights are terminated with a Deutsch IPD / LADD DT04-2P connector. The mating connector plug is DT06-2S. Most LEDLB, LEDP10W and LED10W series lights ship with mating connector as part of a harness or pigtail, depending on the model. Some larger LED lights like the LEDLB-160X2 or LEDLB-200X2 or multiple function LED lights (i.e. high/low beam, modulating, IR/Visible combos) will have different Deutsch connectors.



Click Photo to Enlarge

CONDITIONS

Vin min (V) = 9	**toff (us) = 2.9**
Vin nom (V) = 12	**R1 (kohm) = 50.2**
Vin max (V) = 32	**L1 (uH) = 3.0**
Vo min (V) = 6.5	**L-Pk (A) = 2.9**
Vo nom (V) = 6.8	**L-rms (A) = 2.9**
Vo max (V) = 7	**Ipk (A) = 2.5**
I-LED (A) = 2.2	**R2 (ohm) = 0.10**
Efficiency = .85	**I-FET (A) = 2.2**
fsw nom (kHz) = 150	**fs min (kHz) = 77**
Ts nom (us) = 6.666667	**fs max (kHz) = 301**
Base frequency-	= 36~37Khz @ 12V
Amplitude of pulse width-	= 27Ms
Outside: External dimmer-	= 500Hz
Inside : Current sensing from-	77KHz at 12V to 300KHz at 50V

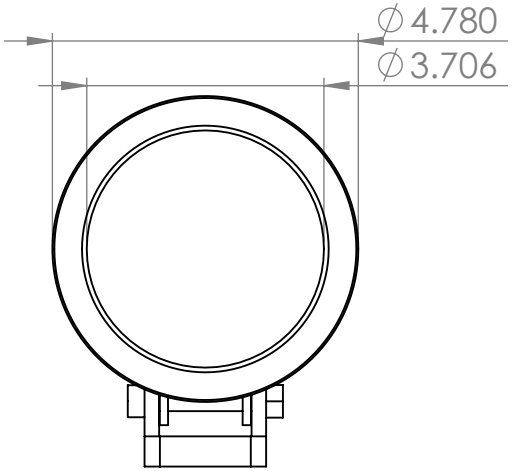

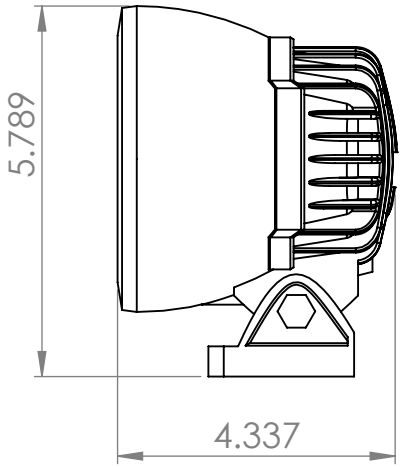

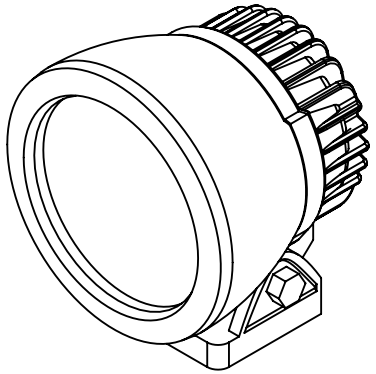

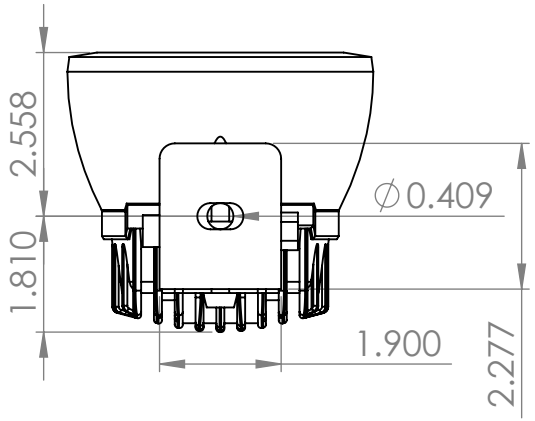

Larson Electronics

TITLE:

LED25WRE

PROPRIETARY AND CONFIDENTIAL
THE INFORMATION CONTAINED IN THIS DRAWING IS THE SOLE PROPERTY OF LARSON ELECTRONICS LLC. ANY REPRODUCTION IN PART OR AS A WHOLE WITHOUT THE WRITTEN PERMISSION OF LARSON ELECTRONICS LLC IS PROHIBITED.

		NAME
DIMENSIONS ARE IN INCHES	DRAWN	JOSH DREDLA
MATERIAL	CHECKED	JEREMY BLANKENSHIP
DO NOT SCALE DRAWING		

SIZE	DWG. NO.	REV
A		

SCALE: 1:3 | SHEET 1 OF 1

5 4 3 2 1









Frequently Asked Questions (FAQ)