Larson Electronics LLC
9419 E US HWY 175, Kemp, TX 75143
Phone: 800.369.6671

www.LarsonElectronics.com
Email: sales@LarsonElectronics.com
Fax: 903.498.3364

LED30W-PAR38-WP

25 Watt LED PAR 38 Spot / Flood Light - Waterproof - 2500 Lumens - Multi Voltage

Product ID: 68961



Larson Electronics LLC manufactures a wide variety of products, including custom built to spec designs. The pictures displayed for this unit are a general representation of form factor for the product line and may not accurately represent this exact configuration in every detail due to custom builds and changes between similar products in our standard catalog. The specifics for this configuration are listed in the specification table and supporting documentation (CAD files, Dimensional Drawing, Name Plate Diagram, Wiring Diagram, etc.). This means that specific details (receptacles, plugs, wires, connections, mounting brackets, external finishes, etc.) may not be accurately represented in images vs specifications. Please review specifications and do not order based solely on images.

LED30W-PAR38-WP 25 Watt LED Bulb

Lamp Type: LED
Watts: 25
Lumens: 2500
Dimensions: 4.75" in diameter
Voltage: 120-277 VAC 60hz
Color: White is 6000K, 4300K, and 2700K (Red, Green, Blue, Amber, and Infrared also available. There may be longer lead times on specialty colors)
CRI: >84 (White)
Operating Temp: -20°C to 85°C
Materials: Aluminum Body, Polycarbonate Lens
Optics: 25° Spot, 60° Flood Light

Features

ETL Listed
50,000 Hour Life Rating
Direct Replacement for PAR38 Bulbs
IP67 Outdoor Approved and Waterproof
Outdoor and Indoor Rated
Rough Service

Special Orders- Requirements

Contact us for special requirements
Toll Free: 1-800-369-6671
Intl: 1-903-270-1187
Fax: 1-903-498-3364
E-mail: sales@larsonelectronics.com

The Larson Electronics LED30W-PAR38-WP 25 Watt LED Style Bulb is designed to fit in standard light bulb sockets and provides durability, multi color options, and rough service that makes it ideal for industrial and commercial applications. This 25 watt LED replacement bulb provides 2500 lumens.

The LED30W-PAR38-WP is an LED light bulb that can serve as a PAR38 LED upgrade from standard light bulbs fitting E26 bulb sockets. Utilizing only 25 Watts and designed to operate with 120-277 Volts AC, this lamp provides higher efficiency than traditional incandescent PAR38 bulbs and is a direct fit replacement. The light output is comparable to a 150 watt incandescent PAR38 bulb.

This lamp has an acceptable operating temperature range of -20°C to 85°C and an operational life of 50,000 hours. The solid state design of this lamp means it is resistant to the effects of impacts and vibrations, providing added durability to withstand conditions that would cause a normal incandescent bulb to fail. The overall dimensions of the LED light are the same as a standard PAR38 incandescent lamp, and the base is constructed of aluminum for durability and resistance to rust and corrosion.

The LED30W-PAR38 is the ideal upgrade and/or replacement for security flood lights around the home or business. This bulb produces nearly 20% more light at 10 feet than a standard 300 watt rough service bulb. Combined with a "pure white" color output, this bulb is ideal for improving the light output of hand lamps, drop lights, and other standard incandescent lighting within industrial applications. This unit is designed for outdoor installations and can be installed in enclosed PAR cans or outside of fixtures with weatherproof outdoor rated E26/E27 sockets. The lamp body is IP67 and does not have to be enclosed within a housing. This LED bulb can be used indoors or outdoors.

The PAR38 is the same base and dimensions as a standard PAR38 incandescent light bulb. You can use this LED light bulb as a replacement for a standard outdoor flood lamp in your home. However, given the durability and longevity, we also see this LED light bulb as an ideal solution for a variety of industrial uses. As such, this LED light bulb can provide additional safety measures and time savings, given the low heat production and that it does not require replacing for 50,000 hours. Since the LED bulb uses solid state technology, the vibration (dropping, etc.) that degrades conventional incandescent bulbs is not an issue with these LED bulbs.

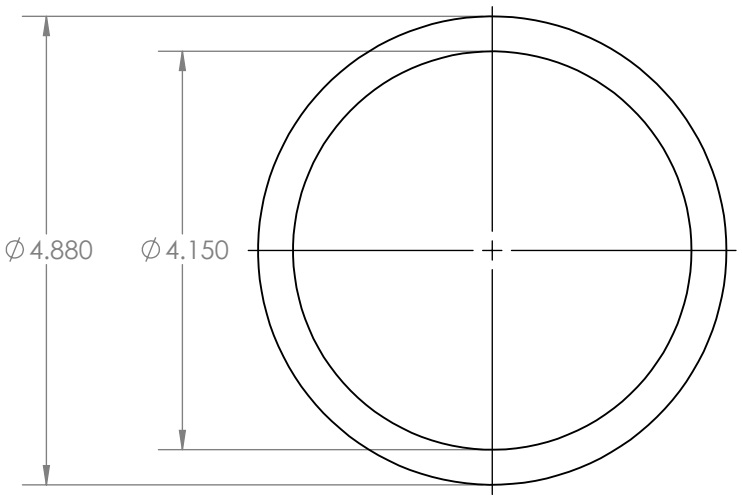

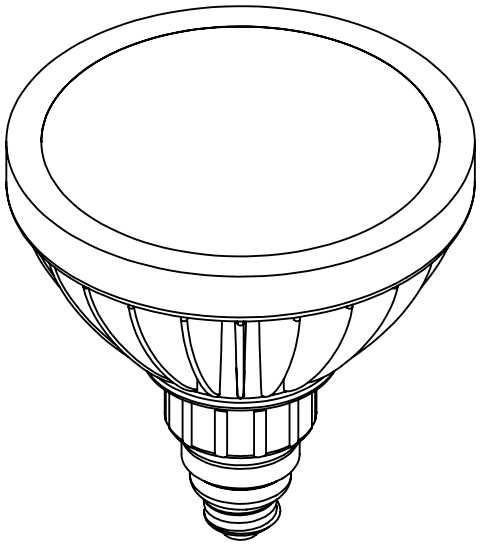

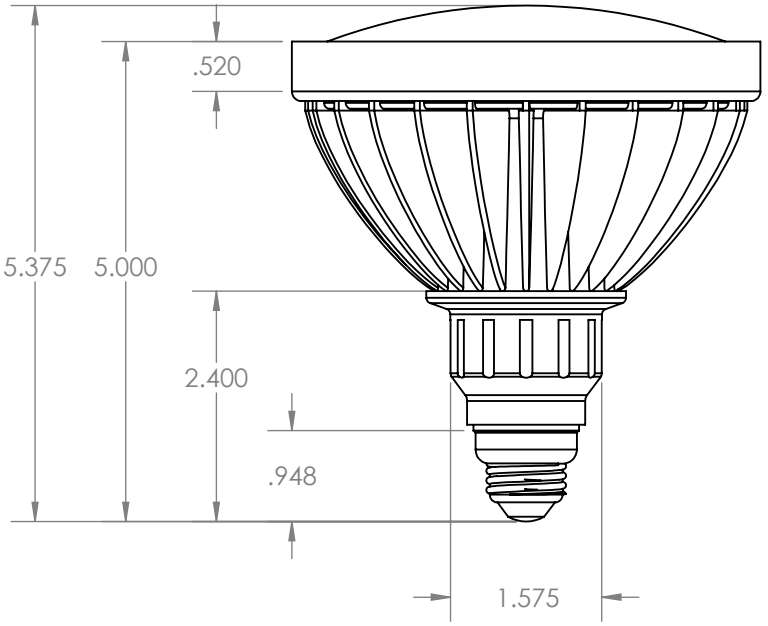

LARSON ELECTRONICS

TITLE:

LED30W-PAR38-WP

PROPRIETARY AND CONFIDENTIAL
THE INFORMATION CONTAINED IN THIS DRAWING IS THE SOLE PROPERTY OF LARSON ELECTRONICS LLC. ANY REPRODUCTION IN PART OR AS A WHOLE WITHOUT THE WRITTEN PERMISSION OF LARSON ELECTRONICS LLC IS PROHIBITED.

		NAME
DIMENSIONS ARE IN INCHES	DRAWN	CHRIS THAUER
MATERIAL	CHECKED	JEREMY BLANKENSHIP
DO NOT SCALE DRAWING		

SIZE	DWG. NO.	REV
A		

SCALE: 1:2 SHEET 1 OF 1

5 4 3 2 1


03







Frequently Asked Questions (FAQ)