Larson Electronics LLC
9419 E US HWY 175, Kemp, TX 75143
Phone: 800.369.6671

www.LarsonElectronics.com
Email: sales@LarsonElectronics.com
Fax: 903.765.7664

EPF-E16-4450-220V-70

Electric Explosion Proof Box Fan / Blower - 4450 CFM - 220 Volt - 70' Cord - 16 inch - Class 1 Div 1

Product ID: 68935



Image: EPF-E16-4450-220V-70

Larson Electronics LLC manufactures a wide variety of products, including custom built to spec designs. The pictures displayed for this unit are a general representation of form factor for the product line and may not accurately represent this exact configuration in every detail due to custom builds and changes between similar products in our standard catalog. The specifics for this configuration are listed in the specification table and supporting documentation (CAD files, Dimensional Drawing, Name Plate Diagram, Wiring Diagram, etc.). This means that specific details (receptacles, plugs, wires, connections, mounting brackets, external finishes, etc.) may not be accurately represented in images vs specifications. Please review specifications and do not order based solely on images.

EPF-E16-4450-220V-70 Explosion Proof Fan/Blower
Dimensions: 19"W x 18"H x 12"D
Weight: 61 lbs
Noise Level : 90 Db
Motor: 1.5 Horsepower
Voltage: 220 VAC 50/60 Hz
Horsepower: 1.5 (1.1kw)
Inrush amps (Start): 40A
Continuous Amps (Run): 8A
Duct: 15` single-ply polyester reinforced PVC
Fan Type: Box Fan/Blower
CFM Delivery : 4450+
Wiring: 70 Foot Cord, 20 amp, 6-20P Exp Proof Plug
Ambient Operating Temp: -20 to 180 Degrees Fahrenheit
Click here to see the airflow curve chart for this fan.

UL and ATEX Approvals
Class 1 Group D
Class II Groups E, F and G
ATEX II 2 G EX d IIB T6
T6 Temp Rating

Special Orders - Special Requirements
Contact us for special requirements
Toll Free: 1-800-369-6671
Intl: 1-903-270-1187
Fax: 1-903-765-7664
E-mail: sales@larsonelectronics.com

Made in Texas

The Larson Electronics EPF-E16-4450-220V-70 Explosion Proof Box Fan / Blower with 15 foot static conductive duct safely and effectively redirects stale air from hazardous location areas. This explosion proof blower meets UL and ATEX standards for hazardous locations and provides high 4450+ CFM output for effective airflow in larger spaces. Designed for use with 220 VAC electrical power.

Larson Electronics LLC
9419 E US HWY 175, Kemp, TX 75143
Phone: 800.369.6671

www.LarsonElectronics.com
Email: sales@LarsonElectronics.com
Fax: 903.765.7664

This portable, electric explosion proof blower (exhaust fan) is suitable for confined spaces and is approved to UL and ATEX safety standards for hazardous locations. This fan features a high efficiency 1.5 hp motor which is fully encapsulated and a precision balanced, non sparking aluminum blower blade for high output and protection against accidental ignitions. This fan has 16 inch intake and exhaust flanges and produces over 4,450 CFM of air output for excellent movement of air in large areas.

Other features include a light weight/high strength, anti-static glass reinforced ABS housing that is corrosion proof and chemical resistant with an IP65 rated and rain tested switch enclosure. This box blower/fan operates on high voltage 220V AC 50/60Hz with a 1.5 amp draw and 1.2 amp constant draw from the 1.5 horsepower motor after startup. Included with this unit is 70 feet of cord fitted with a 20 amp, 6-20P explosion proof plug.

Note on Explosion Proof Fans: Can be used as an intake and an exhaust fan.



Click Photo to Enlarge



Click Photo to Enlarge

Features

- 1.5 HP 250/330 electric motor, 220 VAC - 1.5 amps start and 1.2 amps run
- 90 dB noise level
- 16 inch intake and exhaust flange
- 4450+ cfm free air delivery (3180 CFM with 90 degree bend with 15` duct)
- Approved for Class I Group D and Class II Groups E, F, G
- Aluminum non-sparking blower blade is precision balanced
- IP65 rain tested switch enclosure
- High strength, anti-static glass reinforced ABS housing is lightweight, corrosion proof and chemical resistant
- Reversible duct adapter
- Pre-Wired With 70 Ft. Cord and a 20 amp explosion proof twist-lock plug
- Standard with a 20 amp explosion proof plug

The included 15 foot long duct is a single-ply polyester reinforced PVC vinyl fabric hose design with an external wearstrip reinforced with a spring steel wire helix. It is lightweight for blower applications and highly compressible. The retractability of the static conductive duct allows for convenient storage and easy transport in a fraction of its fully extended length and has low friction loss. The wearstrip offers external abrasion resistance, and is listed as YL 94 V-0 flame retardant. Ambient operating temperature for this unit ranges from -20 degrees to 180 degrees Fahrenheit.

REV	DESCRIPTION	DATE
A	PRODUCTION RELEASE	3/17/2026

EPF-E16-4450-220V-70

LARSON ELECTRONICS®

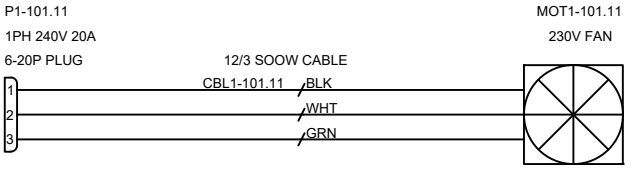

TAGS	QTY	CATALOG	DESCRIPTION
P1-101.11	1	UNV00005391	250VAC 20A EXPLOSION PROOF PLUG
MOT1-101.11	1	UNV00003374	230V 15A EXPLOSION PROOF FAN
CBL1-101.11	1	UNV00002908	12/3 SOOW CABLE

LARSON ELECTRONICS
9419 E US HWY 175,
KEMP, TX 75143

TITLE: EPF-E16-4450-220V-70

DRAWN BY	DATE	REV
S.DESAI	3/17/2026	A
CHECKED BY	SHEET #	DRAWING #
	1 OF 1	101

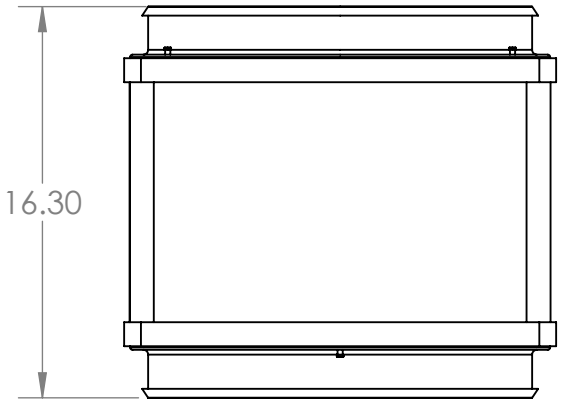

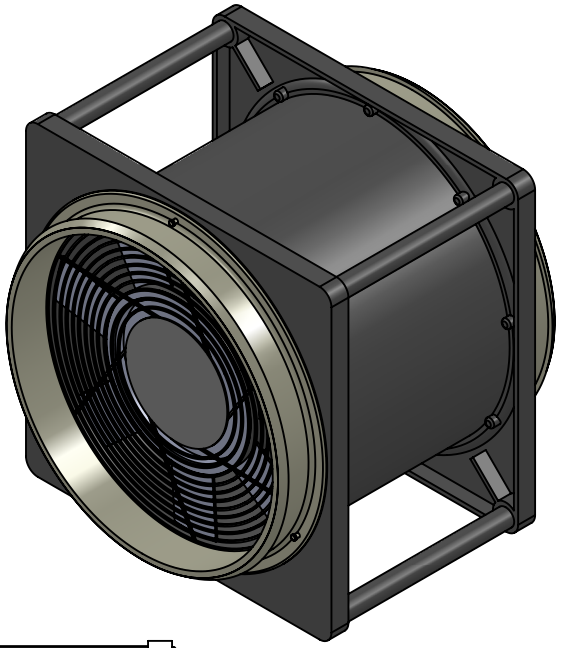

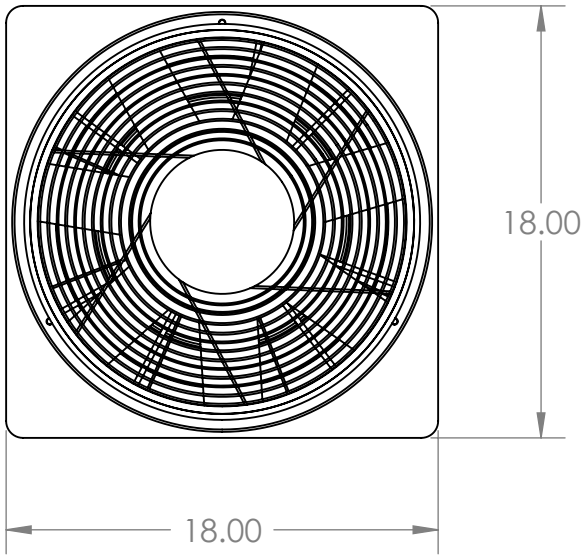

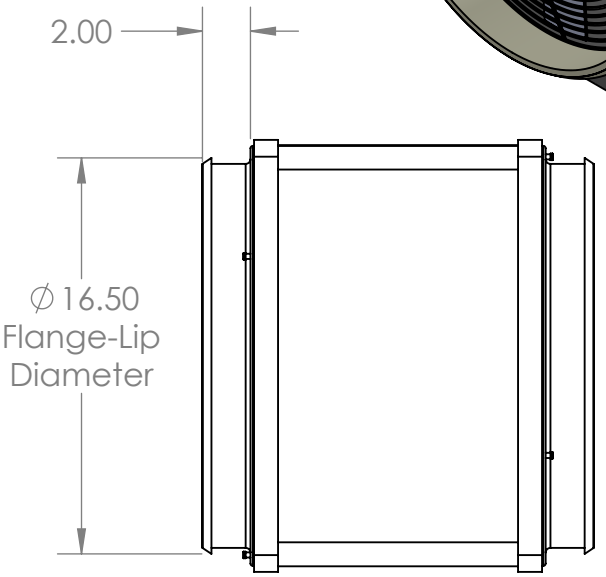

LARSON ELECTRONICS®

TITLE:

EPF-E16-4450

PROPRIETARY AND CONFIDENTIAL
THE INFORMATION CONTAINED IN THIS DRAWING IS THE SOLE PROPERTY OF LARSON ELECTRONICS LLC. ANY REPRODUCTION IN PART OR AS A WHOLE WITHOUT THE WRITTEN PERMISSION OF LARSON ELECTRONICS LLC IS PROHIBITED.

		NAME
DIMENSIONS ARE IN INCHES	DRAWN	Clint Thompson
MATERIAL Mixed	CHECKED	N/A
DO NOT SCALE DRAWING		

SIZE	DWG. NO.	REV
A	A	

SCALE: NTS | SHEET 1 OF 1

5 4 3 2 1

Larson Electronics LLC
9419 E US HWY 175, Kemp, TX 75143
Phone: 800.369.6671

www.LarsonElectronics.com
Email: sales@LarsonElectronics.com
Fax: 903.765.7664



Larson Electronics LLC
9419 E US HWY 175, Kemp, TX 75143
Phone: 800.369.6671

www.LarsonElectronics.com
Email: sales@LarsonElectronics.com
Fax: 903.765.7664



Larson Electronics LLC
9419 E US HWY 175, Kemp, TX 75143
Phone: 800.369.6671

www.LarsonElectronics.com
Email: sales@LarsonElectronics.com
Fax: 903.765.7664



Larson Electronics LLC
9419 E US HWY 175, Kemp, TX 75143
Phone: 800.369.6671

www.LarsonElectronics.com
Email: sales@LarsonElectronics.com
Fax: 903.765.7664



Larson Electronics LLC
9419 E US HWY 175, Kemp, TX 75143
Phone: 800.369.6671

www.LarsonElectronics.com
Email: sales@LarsonElectronics.com
Fax: 903.765.7664

Frequently Asked Questions (FAQ)

There are no Faqs