Larson Electronics LLC
9419 E US HWY 175, Kemp, TX 75143
Phone: 800.369.6671

www.LarsonElectronics.com
Email: sales@LarsonElectronics.com
Fax: 903.498.3364

EPLC-48-4L-LED-G2

Explosion Proof LED Lights on Cart w/ Wheels -2nd Gen - 4' 4 LED lamps - Paint Spray Booth Certified

Product ID: 64388



Larson Electronics LLC manufactures a wide variety of products, including custom built to spec designs. The pictures displayed for this unit are a general representation of form factor for the product line and may not accurately represent this exact configuration in every detail due to custom builds and changes between similar products in our standard catalog. The specifics for this configuration are listed in the specification table and supporting documentation (CAD files, Dimensional Drawing, Name Plate Diagram, Wiring Diagram, etc.). This means that specific details (receptacles, plugs, wires, connections, mounting brackets, external finishes, etc.) may not be accurately represented in images vs specifications. Please review specifications and do not order based solely on images.

EPLC-48-4L-LED-G2 Explosion Proof
UL Listing: United States - Canada
Dimensions: W-30 " L-58 " H-35.5 "
Total Unit Weight: 115 Lbs
Total Watts: 112 watts
Voltage: 120V-60hz 220V-50hz 240V-60hz 277V-60hz: low voltage available, 12 or 24 volts dc.
Total Lumens: Led-T series Bulbs 11,000
Lamp Life Expectancy: Led-T series Bulbs 50,000+ Hours
Efficiency: Led-T series Bulbs 98.21 Lumens per Watt
Temp Range: T6 Rated* -40C - 85C
Beam Angle: 150 degrees
Minimum Operating Temp: -30 C
Maximum Case Temp: 90 C
Color Temp: 5600K
Mounting: Portable Cart with Adjustable Brackets
Wiring: 50ft SOOW cord
U.L Approval: U.S Certificate, Canada Certificate

U.L. Ratings
Class 1 Division 1, Groups C and D
Class 1 Division 2, Group A,B,C,D
UL 595 Outdoor Marine Type (Saltwater)
UL 844, 924
UL 1598 Marine Type
Class II Division 1- 2, Groups E,F,G
UL Certified Canadian Standards
UL listed for Paint Spray Booths*

Special Orders- Requirements
Contact us for special requirements
Toll Free: 1-800-369-6671
Intl: 1-903-270-1187
Fax: 1-903-498-3364
E-mail: sales@larsonelectronics.com

Made in Texas

PLEASE NOTE: ANY FREE SHIPPING OFFERS DO NOT APPLY TO THIS LIGHT CART

The Larson Electronics EPLC-48-4L-LED-G2 Explosion Proof LED Light Cart is U.S./Canada UL Listed Class 1 Division 1, Class 2 Division 1 and offers exceptional LED lamp durability, efficiency, 50,000 hour lamp life, and versatile explosion proof protection for operators working in hazardous locations.

Larson Electronics LLC
9419 E US HWY 175, Kemp, TX 75143
Phone: 800.369.6671

www.LarsonElectronics.com
Email: sales@LarsonElectronics.com
Fax: 903.498.3364

The EPLC-48-4L-LED-G2 explosion proof light cart is UL listed Class 1 Division 1 and Class 2 Division 1 & 2 and offers the ability to quickly and easily add light wherever it is needed. This unit incorporates the highly effective Larson Electronics EPL-48-4L-LED-G2 explosion proof fixture equipped with four 28 Watt LED T-series tube lights into a mobile platform. The platform is constructed of corrosion resistant aluminum alloy, has non sparking casters, and includes a Class 1 Div 1 Explosion Proof Switch with 50 foot of SOOW electric cable as well. This T6 temperature rated explosion proof LED light cart offers superior LED benefits in the form of reduced operating and maintenance costs, extreme lamp life, and high resistance to impacts and vibration.This unit is an excellent lighting solution for operators who need full power illumination in areas where traditional fixed mount lighting is obstructed or cannot effectively reach.

Click Photos to Enlarge Click Photos to Enlarge Click Photos to Enlarge

There is no ballast in this unit and the included LED T-series lamps have a 50,000+ hour service life, both of which result in extreme efficiency, cooler operation and greatly reduced maintenance costs. The solid state design of the LED lamps give this fixture superior resistance to damage from vibrations and extremes in temperature as well as a lamp service life over twice that of standard T8 bulbs. The lamps are protected by heat and impact resistant Pyrex tubes which provide added security against impacts and overspray. The light fixture is constructed of copper free aluminum alloy and the entire unit ships with a 50` SOOW cord and explosion proof plug. The lamp reflectors are corrosion resistant heavy gauge aluminum and coated with a high gloss 93% reflective finish. The cart allows the entire fixture to be adjusted through 270 degrees of rotation to position the lights as needed.
These LED-T series 28 watt LED lamps produce 30% more illumination per watt than standardT8 bulbs. The EPLC-48-4L-LED-G2 is multi-voltage (not multi-tap) and works on the following voltages: 120 Volt 60 HZ, 220 Volt 50 HZ, 240 Volt 60 HZ, 277 Volts 60 HZ. The unit is also offered in low voltage to accommodate those who need voltage on 12 and 24 volts dc.An explosion proof switch comes standard with the EPLC-48-4L-LED, allowing for simple turning on/off while in a hazardous area.
Suggested Applications: PAINT SPRAY BOOTHS, Aircraft maintenance, Oil drilling rigs, Refineries, Solvent and cleaning areas, Gas processing plants, Chemical manufacturing, Waste treatment plants, Gas processing plants.

Made in USA Quality

1. Each unit dialectically tested.
2. Fixture arrives assembled and lamped to reduce installation time and cost. Adjustable mounting brackets allow the light fixture to be rotated while on the cart through a wide degree of positions for optimal light placement.
3. Fixture constructed of extruded corrosion resistant copper free aluminum alloy.
4. No ballast box. No ballast to replace. We simply run the black wire to one end of the bulb and white wire to the other.
5. Heavy gauge extruded aluminum reflectors with high gloss reflective finish. Resists dents and corrosion.
6. A wrench is used to unscrew the end caps for relamping the fixture, while other models require the “tap and knock off” method to loosen the end cap.

Superior LED Benefits

1. Extreme long life.
2. High efficiency and low amp draw.
3. High durability and reliability.
4. Small size and light weight.
5. 100% recyclable.
6. No toxins-lead, mercury.
7. High light output..
8. Consistent color over time.
9. High Versatility.
10. No fragile glass used in construction.
12. Vibration/impact resistant.

Cart Features:
5” non sparking casters
Frame constructed of corrosion resistant aluminum

7. Explosion proof, impact and heat resistant Pyrex tubes provide lamp protection.
8. Spring loaded sockets on both ends hold lamps firmly for maximum shock and vibration protection.

Adjustable fixture brackets to 270 degrees
50 footSOOW electric cable
Class I, Div I Explosion Proof Switch

REV	DESCRIPTION	DATE
A	PRODUCTION RELEASE	04/06/2021

EPLC-48-4L-LED-G2-1227VAC-5600K

LARSON ELECTRONICS®

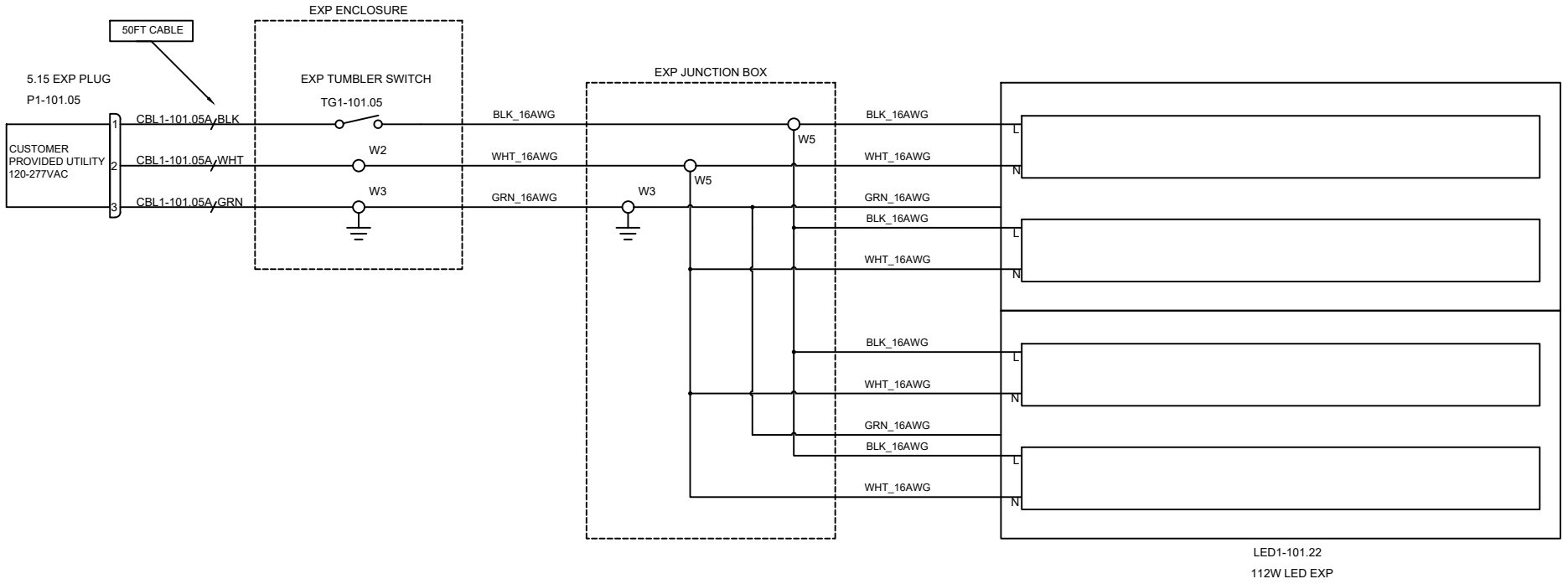

TAGS	QTY	CATALOG	DESCRIPTION
P1-101.05	1	UNV00005389	Explosion Proof Plug - 5-15P 15 Amp - 125V - Quick Wiring / Large Screws
LED1-101.22	1	UNV00004410	EXP 4' 4 LAMP 1227V 5600K
TG1-101.05	1	UNV00005436	HAZ LOC DIV1 1P SWITCH COVER
W5	2	UNV00009803	5 HOLES WAGO
W3	2	UNV00011954	3 HOLE WAGO
W2	1	UNV00009802	2 HOLES WAGO
CBL1-101.05A	1	UNV00007524	CORD 16/3 SOOW UL 90C BLK CABLE

LARSON ELECTRONICS
9419 E US HWY 175,
KEMP, TX 75143

TITLE			
EPLC-48-4L-LED-G2-1227VAC-5600K			
DRAWN BY	DATE	REV	
K.NGUYEN	04/06/2021	A	
CHECKED BY	SHEET #	DRAWING #	
P.CRYER	1 OF 1	101	









Frequently Asked Questions (FAQ)