Larson Electronics LLC
9419 E US HWY 175, Kemp, TX 75143
Phone: 800.369.6671

www.LarsonElectronics.com
Email: sales@LarsonElectronics.com
Fax: 903.765.7664

## EPL-120-50-2023

# Explosion Proof Hand Lamp -100/60 Watt - 120V AC - 50 Foot SOOW Cord w/ 20A Explosion Proof Plug - C

**Product ID: 50853**

Image: EPL-120-50-2023

**Larson Electronics LLC manufactures a wide variety of products, including custom built to spec designs. The pictures displayed for this unit are a general representation of form factor for the product line and may not accurately represent this exact configuration in every detail due to custom builds and changes between similar products in our standard catalog. The specifics for this configuration are listed in the specification table and supporting documentation (CAD files, Dimensional Drawing, Name Plate Diagram, Wiring Diagram, etc.). This means that specific details (receptacles, plugs, wires, connections, mounting brackets, external finishes, etc.) may not be accurately represented in images vs specifications. Please review specifications and do not order based solely on images.**

**EPL-120-50-2023**
**UL Listing:** United States
**Dimensions:** L-16.5 " Dia-5"
**Total Watts:** 100 or 60 watts
**Voltage:** Stnd-120VAC
**Mounting:** Hook
**Wiring:** 50` SOOW Cord With 20 Amp 2023 Explosion Proof Plug
**Lamp Type::** Incandescent
**Ambient Temp::** 40 degrees C maximum
**Operating Temp::** 160 degrees C (T3C) Class 1 & 2

**YOU CAN RENT THIS UNIT. CONTACT 1-800-369-6671.**

Click here to view the Explosion Proof Light Design Description

**NTRL Listings**
Class 1, Division 1 Groups C, D (100 watt)
Class 2, Division 1 Groups F, G (60 watt)
Conforms to UL standard 781
CSA C22.2 No. 12 and CSAC22.2 No. 137

**Special Orders - Special Requirements**
Contact us for special requirements
**Toll Free:** 1-800-369-6671

**Intl:** 1-903-270-1187

**E-mail:** sales@larsonelectronics.com

Larson Electronics LLC
9419 E US HWY 175, Kemp, TX 75143
Phone: 800.369.6671

www.LarsonElectronics.com
Email: sales@LarsonElectronics.com
Fax: 903.765.7664

Made in the USA

**The Larson Electronics EPL-120-50-2023 Explosion Proof Hand Lamp is UL Listed Class 1 Division 1 Groups C and D - and is ideal for general work activities in hazardous locations requiring explosion proof protection.**

This explosion proof work light from Larson Electronics comes complete with 50 feet of explosion proof cord. The EPL-120-50-2023 drop light housing is constructed of aluminum with a rubber bumper guard designed to provide an effective lighting solution for operators requiring a versatile source of illumination. This hazardous location hand lamp is Class 1, Division 1 approved when equipped with a 100 watt bulb and Class 2 Division 1 approved when equipped with a 60 watt bulb. This explosion proof drop light is ideal for hazardous work areas where a ready source of easily managed lighting is desired.

These particular units also come standard with an explosion proof twist-lock plug. The plug is Class I, Division I & II and Class II, Division I & II rated. In order to complete the seal, operator must take twist-lock explosion proof plug and connect to an explosion proof outlet receptacle. Connecting to a regular 120VAC outlet renders the plug useless and should only be done when connecting the light outside of the explosion proof environment.

Dark 40` Container

Click Photos to Enlarge

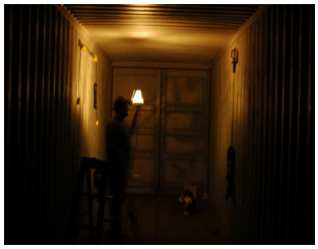

Illuminated with EPL-120-100

Click Photos to Enlarge

This 60 or 100 watt drop light is suitable for use in areas where petrochemical vapors (100 watt) and various dusts (60 watt) are present. This unit is rated Class 1, Division 1, Class 2 Division 1 and comes complete with 50’ of SOOW 16/3 AWG cord ending in a straight blade plug.

This explosion proof hand light operates on standard 120 Volts. This unit is available with either a 100 watt bulb for Class 1 Division 1 operation (Gases Vapors) or a 60 watt bulb for Class 2 division 1 operations (Dusts). Choose your bulb type below when ordering.

---

**Made in USA Quality**

1. Federal Spec Cord.
2. Explosion Proof.
3. 60 or 100 Watt Lamp.

**Lamp Features**

Rubber bumper Guard
Non-sparking aluminum housing
120 VAC operation

| | |
|---|---|
| 4. Rugged fabricated steel and cast aluminum construction. | Aluminum lamp guard |
| 5. Red and Gray paint finish. | Lamp shield prevent shattering |
| 6. UL Class1 Div1 Class 2 Div1 | Plugs into standard outlets |
| 7. 120 Volt Operation | Swivel hook for hanging and hands free operation |
| 8. 50` SOOW cable. | Explosion proof cord |
| 9. Hook for Convenient Placement. | 20 Amp Explosion Proof Twist-Lock Plug |
| 10. Explosion Proof Plug -Class I, Div. I & II | |
| -Class II, Div. I & II | |

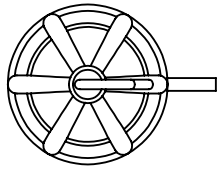

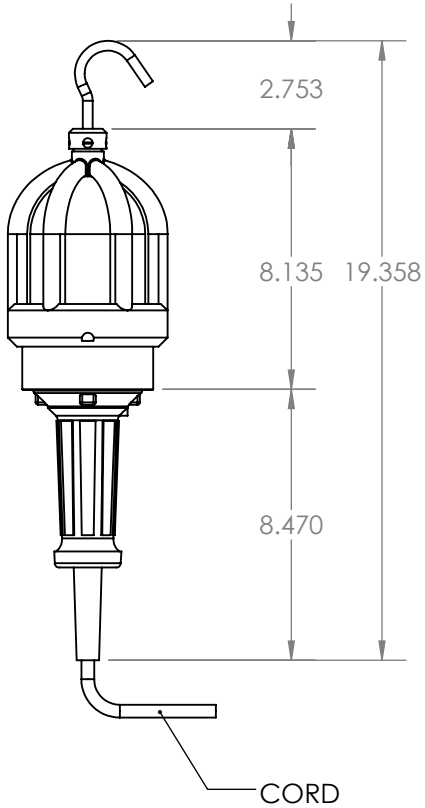


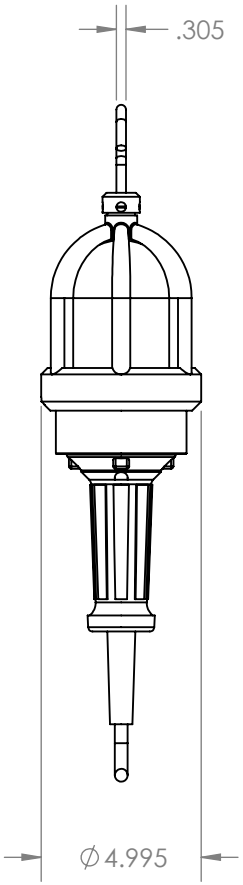


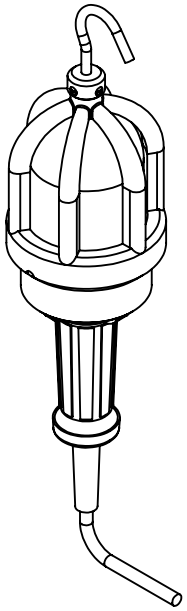

LARSON ELECTRONICS

TITLE:

# EPL-120 Series

**PROPRIETARY AND CONFIDENTIAL**
THE INFORMATION CONTAINED IN THIS DRAWING IS THE SOLE PROPERTY OF LARSON ELECTRONICS LLC. ANY REPRODUCTION IN PART OR AS A WHOLE WITHOUT THE WRITTEN PERMISSION OF LARSON ELECTRONICS LLC IS PROHIBITED.

| | | NAME |
|---|---|---|
| DIMENSIONS ARE IN INCHES | DRAWN | CHRIS THAUER |
| MATERIAL | CHECKED | JEREMY BLANKENSHIP |
| DO NOT SCALE DRAWING | | |

| SIZE | DWG. NO. | REV |
|---|---|---|
| A | | |
| SCALE: 1:6 | | SHEET 1 OF 1 |

5 4 3 2 1

Larson Electronics LLC
9419 E US HWY 175, Kemp, TX 75143
Phone: 800.369.6671

www.LarsonElectronics.com
Email: sales@LarsonElectronics.com
Fax: 903.765.7664

Larson Electronics LLC
9419 E US HWY 175, Kemp, TX 75143
Phone: 800.369.6671

www.LarsonElectronics.com
Email: sales@LarsonElectronics.com
Fax: 903.765.7664

# Certification

Manufacturer: Larson Electronics LLC
Address: 9419 US-HWY 175
Kemp, Texas 75143

**Declare the following equipment conforms to the standard(s) as listed:**

Model: EPL, EHL Series
Description: Explosion Proof Handlamp

**Evaluated Listings:**

**UL:** QPKX.E30252 – NEC / United States standards
**UL:** QPKX7.E30252 – CEC / Canada standards
**ETL:** Assembly under UL 1203, UL 508A – NEC / United States standards
**ETL:** Assembly under CSA C22.2 No. 14, No. 30, No. 25– CEC / Canadian standards

The EPL, EHL series of handlamps are certified to NEC and CEC standards for hazardous locations for:

- NEC: Class I, Divisions 1&2, Groups C & D; Class II, Divisions 1&2, Groups F & G
- CEC: Class I, Divisions 1&2, Groups C & D; Class II, Divisions 1&2, Groups F & G

The EPL, EHL Series is comprised of a 61430 series hand lamp. This handlamp contains a LED, incandescent, or compact fluorescent lamp, SOOW cord, and cord cap. The assembly may include an inline step down transformer, a molded backbone assembly, or other accessories. This assembly is built to NEC and CEC standards for hazardous locations.

Signed for and on behalf of: Larson Electronics, LLC
Place of issue: Kemp, TX

Signature: James Thomas

Name: James Thomas
Position: Operations Manager

intertek
Total Quality. Assured.

<- Back

## Product Description

| | |
|---|---|
| **Title:** | INDUSTRIAL CONTROL PANELS |
| **Company:** | LARSON ELECTRONICS LLC - Kemp, TX USA |
| **Product Information:** | Industrial Control Panels For General Use. |
| **Evaluated to the following:** | A representative sample of the listed devices have been tested, investigated and found to comply with the requirements of the Standard(s) for Industrial Control Panels (UL-508A) and are identified with the ETL Listed Mark. |

<- Back

### Contact Us

ETL listed products that are in doubt or for products that do not appear in the directory, please request a verification of certification.
Americas+1-888-347-5478 (or +1-847-660-7407)
Email etldirectory@intertek.com

Intertek Home
Product Directories
DLP on mobile devices

### Inspector Center

Get up-to-date information on everything from our Accreditations to our Certifications and Marks. Learn more...

### News

Intertek Unveils New Design for Product Safety and Quality Certification Marks. Learn more...

© 2010 Intertek All Rights Reserved.
All other product or service names are the property of their respective owners.

intertek
Total Quality. Assured.

<- Back

## Product Description

| | |
|---|---|
| **Title:** | EXPLOSION-PROOF & DUST IGNITION-PROOF ELECTRICAL EQUIPMENT FOR USE IN HAZARDOUS (CLASSIFIED) LOCATIONS |
| **Company:** | LARSON ELECTRONICS LLC - Kemp, TX USA |
| **Product Information:** | Explosion-proof or dust-ignition-proof Industrial Control Panels for use in Hazardous (Classified) Locations, Model Nos. Custom Industrial Control Panels |
| **Evaluated to the following:** | A representative sample of the listed devices have been tested, investigated and found to comply with the requirements of the Standard(s) for Explosion-Proof and Dust Ignition-Proof Electrical Equipment for Use in Hazardous (Classified) Locations (UL-1203) and are identified with the ETL Listed Mark. |

<- Back

**Contact Us**

ETL listed products that are in doubt or for products that do not appear in the directory, please request a verification of certification.
Americas+1-888-347-5478 (or +1-847-660-7407)
Email etldirectory@intertek.com

Intertek Home
Product Directories
DLP on mobile devices

**Inspector Center**

Get up-to-date information on everything from our Accreditations to our Certifications and Marks. Learn more...

**News**

Intertek Unveils New Design for Product Safety and Quality Certification Marks. Learn more...

© 2010 Intertek All Rights Reserved.
All other product or service names are the property of their respective owners.

intertek
Total Quality. Assured.

<- Back

## Product Description

| | |
|---|---|
| **Title:** | INDUSTRIAL CONTROL EQUIPMENT |
| **Company:** | LARSON ELECTRONICS LLC - Kemp, TX USA |
| **Product Information:** | Industrial Control Panels For General Use.<br><br>Industrial Control Panels Relating to Hazardous (Classified) Locations, Custom Industrial Control Panels.<br><br>Power Distribution System, Model Nos. MGL, MPD, MGS series; Followed by AAK-PBB.FFF-SCC.GGG-EEXCCC.DDD; Where AA = 2,3,5,7,9,15,20,25,30,45,50,75; BB = 1P, 3P; FFF = 480,240,208,120; CC = 1P,3P; GGG = 480,240,208,120; EE = # of outlets; CCC = voltage; DDD = outlet amperage. |
| **Evaluated to the following:** | A representative sample of the listed devices have been tested, investigated and found to comply with the requirements of the Standard(s) for Industrial Control Equipment (CAN/CSA-C22.2 No. 14) and are identified with the cETL Listed Mark. |

<- Back

### Contact Us

ETL listed products that are in doubt or for products that do not appear in the directory, please request a verification of certification.
Americas+1-888-347-5478 (or +1-847-660-7407)
Email etldirectory@intertek.com

Intertek Home
Product Directories
DLP on mobile devices

### Inspector Center

Get up-to-date information on everything from our Accreditations to our Certifications and Marks. Learn more...

### News

Intertek Unveils New Design for Product Safety and Quality Certification Marks. Learn more...

© 2010 Intertek All Rights Reserved.
All other product or service names are the property of their respective owners.

intertek
Total Quality. Assured.

<- Back

## Product Description

| | |
|---|---|
| **Title:** | ENCLOSURES |
| **Company:** | LARSON ELECTRONICS LLC - Kemp, TX USA |
| **Product Information:** | Explosion-proof or dust-ignition-proof Industrial Control Panels for use in Hazardous (Classified) Locations, Model Nos. Custom Industrial Control Panels<br><br>Luminaires, Model Nos. EPL-48-2L-LED-SFC, EPL-24-2L-LED-SFC. for use in Hazardous Locations: Class I, Div. 1, Groups C and D T5 or T6 -20°C < Tamb < 40°C Class II, Div. 1., Groups E, F, and G; Class III Div.1 T3B -20°C < Tamb < 40°C |
| **Evaluated to the following:** | A representative sample of the listed devices have been tested, investigated and found to comply with the requirements of the Standard(s) for Enclosures for use in Class II, Groups E, F, G Hazardous Locations (CAN/CSA-C22.2 No. 25) and are identified with the cETL Listed Mark. |

<- Back

### Contact Us

ETL listed products that are in doubt or for products that do not appear in the directory, please request a verification of certification.
Americas+1-888-347-5478 (or +1-847-660-7407)
Email etldirectory@intertek.com

Intertek Home
Product Directories
DLP on mobile devices

### Inspector Center

Get up-to-date information on everything from our Accreditations to our Certifications and Marks. Learn more...

### News

Intertek Unveils New Design for Product Safety and Quality Certification Marks. Learn more...

© 2010 Intertek All Rights Reserved.
All other product or service names are the property of their respective owners.

intertek
Total Quality. Assured.

<- Back

## Product Description

| | |
|---|---|
| **Title:** | EXPLOSION-PROOF ENCLOSURES FOR USE IN CLASS I HAZARDOUS LOCATIONS |
| **Company:** | LARSON ELECTRONICS LLC - Kemp, TX USA |
| **Product Information:** | Explosion-proof or dust-ignition-proof Industrial Control Panels for use in Hazardous (Classified) Locations, Model Nos. Custom Industrial Control Panels |
| **Evaluated to the following:** | A representative sample of the listed devices have been tested, investigated and found to comply with the requirements of the Standard(s) for Explosion-Proof Enclosures for Use in Class I Hazardous Locations (CAN/CSA-C22.2 No. 30) and are identified with the cETL Listed Mark. |

<- Back

### Contact Us

ETL listed products that are in doubt or for products that do not appear in the directory, please request a verification of certification.
Americas+1-888-347-5478 (or +1-847-660-7407)
Email etldirectory@intertek.com

Intertek Home
Product Directories
DLP on mobile devices

### Inspector Center

Get up-to-date information on everything from our Accreditations to our Certifications and Marks. Learn more...

### News

Intertek Unveils New Design for Product Safety and Quality Certification Marks. Learn more...

© 2010 Intertek All Rights Reserved.
All other product or service names are the property of their respective owners.

**Material Safety Data Sheet**

To Whom It May Concern,

The Larson Electronics LLC EPL and EHL industrial line of LED handlamps for hazardous locations are considered "ARTICLES" under 29 CFR 1910-1200, the OSHA Hazard Communication Standard, and do not require a Material Safety Data Sheet (MSDS). This document does not expire.

Articles are specifically exempt from the regulations of this standard. OSHA defines an article as follows:

1910-1200(c) – Article means a manufactured item other than a fluid or particle:

i. Which is formed to a specific shape or design during manufacture;
ii. Which has end use function(s) dependent in whole or in part upon its shape or design during end use; and
iii. Which under normal conditions does not release more than very small quantities.

The "hazardous location" and "explosion proof" are terminology for the environment where these products will be installed. This is not to be confused with "hazardous materials;" this product does not contain any hazardous materials.

The incandescent or compact fluorescent lamp (only NON LED models) installed within the light fixture requires a Material Safety Data Sheet (MSDS). The MSDS for incandescent and compact fluorescent lamps are contained in the following pages. Specific MSDS depends on lamp ordered.

Regards,

Ray Smith

Ray Smith
Larson Electronics, LLC.



LARSON ELECTRONICS LLC • 9419 E US HWY 175 • KEMP, TX 75143
p: 1-800-369-6671 • intl: 903-498-3363 • f: 903-498-3364 • sales@larsonelectronics.com

PHILIPS

Philips Lighting Company

**MATERIAL SAFETY DATA SHEET**

**PRODUCT: INCANDESCENT LAMPS** **Revised: 6/01**

## SECTION 1: MANUFACTURER

Manufacturer's Name and Address: Philips Lighting Company
A Division of North America Philips Corporation
200 Franklin Square Drive
P. O. Box 6800
Somerset, N. J. 08875

Emergency Telephone No.: (800) 424-9300 CHEMTREC
(732) 563-3197 Safety and Compliance
Other Information Calls: (800)-PLC BULB

## SECTION 2: HAZARDOUS INGREDIENTS

| | OSHA PEL | ACGIH TLV | PERCENTAGE |
|---|---|---|---|
| Lead + (7439-92-1) | .05mg/m$^3$ | less than .1mg/m$^3$ | approx. .025 |

+ Lead is found within the glass tubing inside the lamp and inside the solder.

## SECTION 3: PHYSICAL/CHEMICAL DATA

This item is a glass light bulb. The base is generally aluminum, some applications use brass bases. Chemical characteristics not applicable.

## SECTION 4: FIRE AND EXPLOSION DATA

This item is a light bulb. It has no fire data. Under extreme heat, bulb might crack or melt.

## SECTION 5: REACTIVITY DATA

Stability: Lamp is stable
Incompatibility: Glass will react with Hydrofluoric Acid.
Base will react with acids.
Polymerization: Will not occur.

---

## SECTION 6: HEALTH HAZARD DATA

Not applicable for the intact lamp, when power is off. When lamp is on, bulb gets hot to the touch.

EMERGENCY AND FIRST AID PROCEDURE: If glass cuts occur due to breakage of lamp, use normal first aid procedure.

---

## SECTION 7: PRECAUTIONS FOR SAFE HANDLING AND USE

When replacing a lamp, be sure the power to the socket is turned off before removing old lamp.

Normal precautions should be taken for the collection of broken glass.

WASTE DISPOSAL METHOD: Under the Toxicology Characteristic Leachate Procedure (TCLP) promulgated by the U.S. Environmental Protection Agency (EPA), tests of used or spent incandescent lamps will fail the TCLP for lead if they contain lead solder. Under the Universal Waste Rule, lamps which fail the TCLP can treated as a Universal Waste and sent for recycling rather than hazardous waste disposal. If treated under the UWR rules are much simpler and easier from a compliance standpoint. Check with your local and State Authorities for guidance.

Small numbers of these lamps may be covered under the Conditionally exempt small generator classification. Not all States accept this exemption, especially in the East. To determine your status check with your local or State authorities. Households are exempt from Federal hazardous waste jurisdiction, but individual states may vary. Customers should review their waste handling practices to assure that they are properly disposing of waste lamps.

---

A division of
Philips Electronics North America Corporation

200 Franklin Square Drive
P.O. Box 6800
Somerset, NJ 08875-6800
Tel: 732.563.3000



## SECTION 8: CONTROL MEASURES

Hand and Eye Protection: Appropriate hand and eye protection should be worn when disposing of lamps or handling broken glass.

A division of
Philips Electronics North America Corporation

200 Franklin Square Drive
P.O. Box 6800
Somerset, NJ 08875-6800
Tel: 732.563.3000

Prepared: 7/98

S01-93002

PHILIPS

Philips Lighting Company

**MATERIAL SAFETY DATA SHEET**

**PRODUCT: Compact Fluorescent Lamps**



## SECTION 1: MANUFACTUERER

Manufacturer's Name and Address: Philips Lighting Company
A Division of Philips Electronics
North America Corporation
200 Franklin Square Drive
P.O. Box 6800
Somerset, NJ 08875

Emergency Telephone Number: (800) 424-9300 CHEMTREC
Other Information Calls: (732) 563-3197 Safety and Compliance

## SECTION 2: HAZARDOUS INGREDIENTS

| | OSHA (PEL) $mg/m^3$ | ACGIH (TLV) $mg/m^3$ | % by Wt. |
|---|---|---|---|
| Phosphor Powder | | | |
| Nuisance Dust | 15 | 10 | Approx. 2.5 |
| Cerium Terbium Magnesium Aluminate* | N/A | 10 | Approx. .25 |
| Barium Magnesium Aluminate* | N/A | 1.0 | Approx. .5 |
| Yttrium Oxide (1314-36-9) | 1.0 | 1.0 | Approx. .5 |
| Antimony*(7440-36-0) | .5 | .5 | Approx .01% |
| Manganese*(7439-96-5) | .5 | .2 | Approx .02% |
| Mercury (7439-97-6) | .1 | .025 | < than 20 ppm |

*PEL and TLV are given for magnesium, aluminum oxide, yttrium, antimony, and mangenese. Barium aluminate is not a soluble compound. Antimony and Manganese are tightly bound within the crystal matrix of the phosphor (Calcium Phosphate).

## SECTION 3: CHEMICAL/PHYSICAL DATA

Not applicable. This item is a light bulb. The bulb is glass, the base is a coated aluminum. The coating is inert.

---

## SECTION 4: FIRE AND EXPLOSION DATA

FIRE AND EXPLOSION DATA NOT APPLICABLE -- under extreme heat, glass envelope might melt or crack.

---

## SECTION 5: REACTIVITY DATA

Stability: Lamp is stable.
Polymerization: Not applicable.
Incompatibility: Glass will react with Hydrofluoric Acid.

---

## SECTION 6: HEALTH HAZARD DATA

Not applicable to the intact lamp. Breakage of the lamp may result in some exposure to the phosphor powder dust and to a very little amount of elemental mercury vapor. No adverse affects are expected from occasional exposure to broken lamps, but as a matter of good practice, prolonged or frequent exposure should be avoided through the use of adequate ventilation during disposal of large quantities of lamps.

---

**EMERGENCY FIRST AID:** NORMAL FIRST AID PROCEDURE FOR GLASS CUTS IF SUCH OCCUR THROUGH LAMP BREAKAGE.

---

## SECTION 7: PRECAUTIONS FOR SAFE HANDLING AND USE

Normal precautions should be taken for the collection of broken glass.

Waste Disposal Method: At the end of rated life, when this lamp is removed from service, it will be subjected to the current Toxic Characteristic Leaching Procedure (TCLP) prescribed by the Environmental Protection Agency. This test is used to determining whether an item is a hazardous waste or a non-hazardous waste under current E. P. A. definition. Philips Lighting will provide the test data on request. This result will allow the generator to evaluate all of the disposal options, which may be available in the particular state in which the generator's facility is located. The generator should check with federal, state and local officials for their guidance. In most states ALTO lamps are considered non-hazardous subtitle D waste. Philips encourages recycling of its products by qualified recyclers.

---

## SECTION 8: CONTROL MEASURES

Respiratory Protection: Appropriate dust mask should be used if large quantities of lamps are being broken for disposal.

Ventilation: Avoid inhalation of any airborne dust. Provide local exhaust when disposing of large quantities of lamps.

Hand and Eye Protection: Appropriate hand and eye protection should be worn when disposing of large quantities of lamps or handling broken lamps.

## SECTION 9: REGULATORY ISSUES

As a product these mercury containing lamps being shipped in the manufacturer's original packaging are not regulated by air, truck or ocean shipment. As a waste, spent ALTO fluorescent lamps maybe regulated in various states and local communities. This material safety data sheet does not constitute "knowledge of the waste", in certain jurisdictions. TCLP data will be furnished upon request.

UL Product iQ™

# QPKX.E30252 - Portable Luminaires for Use in Hazardous Locations

## Portable Luminaires for Use in Hazardous Locations

See General Information for Portable Luminaires for Use in Hazardous Locations

**DANIEL WOODHEAD CO**
2222 WELLINGTON CT
LISLE, IL 60532 USA

E30252

Portable lighting units having lamp compartments of explosion-proof construction and sealed from terminal compartments which have provision for connection of three-conductor, flexible cord for extra hard usage.

**Class I, Groups C and D; Class II, Groups F and G.**

Cat. No. 1080-HZ12, 13W, 12Vac or dc (PL13 fluorescent lamp).

Cat. No. 1080-HZ, 13W, 120Vac (PL-13 fluorescent lamp).

Cat. No. 1090-HZ, 26W, 120Vac (PLC 26 W fluorescent lamp).

Cat. No. 1090-HZ12, 26W, 14.5Vac, 12Vdc. (PLC 26W fluorescent lamp).

Cat. No. 61430CFL, 25W, 120V, (A21 or smaller).

Cat. No. 61430LED, 10W, 120-250V, (A21 or smaller).

Cat. No. 61450; 21W, 120V (LED).

Cat. No. 61440-MH, 50 W metal halide (M110 lamp), 120V.

Cat. Nos. 1070-HZ35, -HZ50, -HZ70, -HZ70MH, -HZ100, may be followed by G.

**Class I, Groups C and D.**

Cat. No. 61430, 100W max., 250V (A21 or smaller).

Cat. Nos. 1635-6A, 1635-6B, 1635-12A, 1635-12B, 100W max., 120V (A21 or smaller).

Cat. No. 1655-12, Class 2 LED Module

Cat. No. 1070-HZ150.

**Class II, Groups F and G.**

Cat. No. 61430, 75W (A21 or smaller) max.250V.

Cat. Nos. 1635-6A, 1635-6B, 1635-12A, 1635-12B, 75W (A21 or smaller) max., 120V.

Cat. No. 1655-12, Class 2 LED Module

**Class I, Groups C and D; Class II, Group F.**

Cat. No. 1070-HZ.

Last Updated on 2015-12-02

---

The appearance of a company's name or product in this database does not in itself assure that products so identified have been

manufactured under UL's Follow-Up Service. Only those products bearing the UL Mark should be considered to be Certified and covered under UL's Follow-Up Service. Always look for the Mark on the product.

UL permits the reproduction of the material contained in the Online Certification Directory subject to the following conditions: 1. The Guide Information, Assemblies, Constructions, Designs, Systems, and/or Certifications (files) must be presented in their entirety and in a non-misleading manner, without any manipulation of the data (or drawings). 2. The statement "Reprinted from the Online Certifications Directory with permission from UL" must appear adjacent to the extracted material. In addition, the reprinted material must include a copyright notice in the following format: "© 2020 UL LLC"

UL Product iQ™

# QPKX7.E30252 - Portable Luminaires for Use in Hazardous Locations Certified for Canada

## Portable Luminaires for Use in Hazardous Locations Certified for Canada

See General Information for Portable Luminaires for Use in Hazardous Locations Certified for Canada

**DANIEL WOODHEAD CO** E30252
2222 WELLINGTON CT
LISLE, IL 60532 USA
**Class I, Groups C and D.**

**Class II, Groups F and G.**

Cat. No. 61450; 21W, 120V (LED).

Cat. No. 1655-12, Class 2 LED Module

Last Updated on 2015-12-02

---

The appearance of a company's name or product in this database does not in itself assure that products so identified have been manufactured under UL's Follow-Up Service. Only those products bearing the UL Mark should be considered to be Certified and covered under UL's Follow-Up Service. Always look for the Mark on the product.

UL permits the reproduction of the material contained in the Online Certification Directory subject to the following conditions: 1. The Guide Information, Assemblies, Constructions, Designs, Systems, and/or Certifications (files) must be presented in their entirety and in a non-misleading manner, without any manipulation of the data (or drawings). 2. The statement "Reprinted from the Online Certifications Directory with permission from UL" must appear adjacent to the extracted material. In addition, the reprinted material must include a copyright notice in the following format: "© 2020 UL LLC"

# Certification

Manufacturer: Larson Electronics LLC
Address: 9419 US-HWY 175
Kemp, Texas 75143

**Declare the following equipment conforms to the standard(s) as listed:**

Model: EPL, EHL Series
Description: Explosion Proof Handlamp

**Evaluated Listings:**

**CE:** DIRECTIVE 2014/35/EU - LOW VOLTAGE DIRECTIVE
**CE:** DIRECTIVE 2014/30/EU - EMC DIRECTIVE
**CE:** Regulation (EC) No 1907/2006 - REACH REGULATION
**CE:** DIRECTIVE 2015/863/EU - ROHS DIRECTIVE

The EPL, EHL series complies with the essential protection requirements of the European Parliament of the Council Directive for Low Voltage Directive, EMC Directive, REACH Regulation, and RoHS Directive. This certification applies to all specimens manufactured in accordance to the manufacture's drawings.

Signed for and on behalf of: Larson Electronics, LLC
Place of issue: Kemp, TX

Signature: James Thomas

Name: James Thomas
Position: Operations Manager

# Certification

Manufacturer: Larson Electronics LLC
Address: 9419 US-HWY 175
Kemp, Texas 75143

**Declare the following equipment conforms to the standard(s) as listed:**

Model: EPL, EHL Series
Description: Explosion Proof Handlamp

**Evaluated Listings:**

**CE:** DIRECTIVE 2015/863/EU - ROHS DIRECTIVE

This is to certify that products offered by Larson Electronics LLC comply with the Reduction of Hazardous Substances (RoHS) directives. Directive 2002/95/EC became effective on 1 July 2006. It restricts the use of six substances in the manufacture of electrical and electronic equipment. This directive was revised in June 2011 and is now referred to as directive 2011/65/EU. Directive 2015/863/EU amending Annex II to Directive 2011/65/EU announced plans to add four substances from 22 July 2019.

We hereby certify that the equipment specified above conforms to the Directive(s) by containing less of the restricted substances than the stated limits.

Signed for and on behalf of: Larson Electronics, LLC
Place of issue: Kemp, TX

Signature: James Thomas

Name: James Thomas
Position: Operations Manager

# Certification

Manufacturer: Larson Electronics LLC
Address: 9419 US-HWY 175
Kemp, Texas 75143

**Declare the following equipment conforms to the standard(s) as listed:**

Model: EPL, EHL Series
Description: Explosion Proof Handlamp

**Evaluated Listings:**

**CE:** Regulation (EC) No 1907/2006 - REACH REGULATION

This letter establishes the opinion of Larson Electronics LLC regarding the status, under the current European Union ("EU") Regulations on Registration, Evaluation, Authorization, and Restriction of Chemical Substances ("REACH").

REACH does not apply to manufactured products which are referred to as "completed articles". Substances (chemicals) are subject to REACH registration, NOT products.

In addition, Articles are exempt from the REACH requirements if (a) the Article does not contain a substance of very high concern or candidate substance in an amount exceeding 0.1% weight by weight, and (b) if substances present in the Article in excess of 1 ton per year per importer are not expected nor intended to be released.

Based on communication with our raw material suppliers, we conclude that to the best of our knowledge our products requiring REACH compliance do not contain any of the currently listed SVHC in concentrations of 0.1% or above.

Accordingly, we foresee no registration or pre-registration requirement for the products we supply.

Signed for and on behalf of: Larson Electronics, LLC
Place of issue: Kemp, TX

Signature: James Thomas

Name: James Thomas
Position: Operations Manager

Larson Electronics LLC
9419 E US HWY 175, Kemp, TX 75143
Phone: 800.369.6671

www.LarsonElectronics.com
Email: sales@LarsonElectronics.com
Fax: 903.765.7664

# Frequently Asked Questions (FAQ)

There are no Faqs