Larson Electronics LLC
9419 E US HWY 175, Kemp, TX 75143
Phone: 800.369.6671

www.LarsonElectronics.com
Email: sales@LarsonElectronics.com
Fax: 903.498.3364

LED10W-4R-IR-2P

Combination Infrared and Visible LED Light with Dual Power Input

Product ID: 48768



Larson Electronics LLC manufactures a wide variety of products, including custom built to spec designs. The pictures displayed for this unit are a general representation of form factor for the product line and may not accurately represent this exact configuration in every detail due to custom builds and changes between similar products in our standard catalog. The specifics for this configuration are listed in the specification table and supporting documentation (CAD files, Dimensional Drawing, Name Plate Diagram, Wiring Diagram, etc.). This means that specific details (receptacles, plugs, wires, connections, mounting brackets, external finishes, etc.) may not be accurately represented in images vs specifications. Please review specifications and do not order based solely on images.

This compact, high powered LED emitter light produces 2 distinct light output types. The top two LEDs are based on a 3 watt IR packages, which are available in 750nm, 850nm or 940nm. The range of the IR lighting, with appropriate night vision equipment will exceed 1000 feet. The bottom 2 LEDs are based on 10 watt LED packages, producing 1600 lumens and projecting a bright, white beam 300 feet long and 50 feet wide. The total wattage draw of the entire light fixture is 26 watts (20W visible and 6W IR). This 4 inch square LED light fixture produces 1600 Lumens (150 watt halogen equivalent) of visible light and 6 watts of infrared light, while drawing just over 2 amps due to advanced electronic drivers which are also responsible for their 50,000 hour life span and variable 9-48 Volt DC input.
The LEDs emitter is potted into an aircraft grade aluminum chassis that is designed to protect the LEDs and dissipate heat with an integrated heat sink fin array at the back of the unit. Even after running for a full hour, the lenses are only mildly warm. The housing is suspended within a form fitting trunnion (yolk-type) mount, this LED light can be adjusted and locked into any position to suit the application. A single stud protrudes from the bottom of the mount, enabling the operator to install the light using a simple through hole mount. The light can be installed anywhere a half-inch hole can be drilled.

The IP68 ingress protection rated housing makes them impenetrable to dust and submersible under water up to 3 meters. The 97% optically clear polycarbonate lenses are secured by a 6061 aluminum face plate which doubles as a radiant heat sink to melt away snow and ice in

frigid conditions. The stainless steel mounting bracket features knurled aiming knobs for 90 degrees of adjustment and is centered on the profile of the lights which provides a slim 1.5" mounting depth. These LED lights are certified to 6G RMS with vibration tests to ensure performance in high impact conditions.

Spot Beam Optics Angle: 10 degrees (create a narrower, longer, distance oriented beam)
Flood Beam Optics Angle: 35 degrees (creates a shorter, wider, diffused beam)
Each LED can be configured for spot or flood output prior to shipping.

BUY AMERICAN COMPLIANT

Dimensions: 5.67 X 4.13 X 3.13 (inches)
Weight: 3.1 pounds.
Voltage: Multi-voltage unit operates on inputs ranging from 9 to 50 volts DC.
3 Year Limited Warranty
3 year warranty replacement on this LED light (or LED bulbs for light fixtures with removable LED bulbs). After 30 days, the customer ships the failed LED light and/or LED bulb to Larson Electronics at their expense. If the failure is a manufacturer defect, we will ship a new replacement to the customer. If failure occurs within 30 days of receipt, Larson Electronics will provide a return label via email to the customer. When the failed light is returned, Larson Electronics will ship a new replacement.
CE Certified
EN55015 EMI
EN61547 EMS
EN62471 Photobiological Safety
MILSPEC Rated
Approved for Australian Military Use

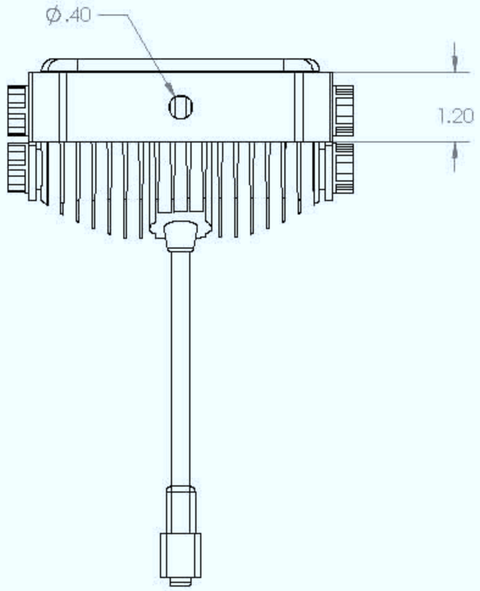

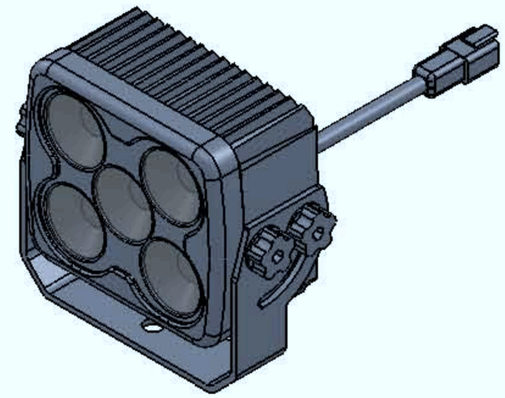

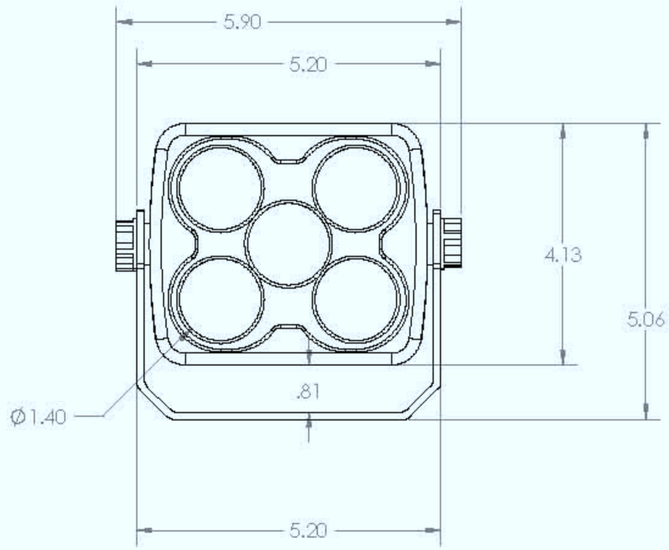

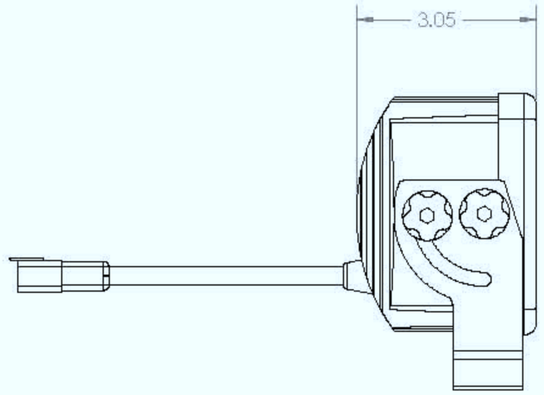

		UNLESS OTHERWISE SPECIFIED:		NAME	DATE
		DIMENSIONS ARE IN INCHES TOLERANCES: FRACTIONAL ± ANGULAR: MACH ± BEND ± TWO PLACE DECIMAL ± THREE PLACE DECIMAL ±	DRAWN		
			CHECKED		
			ENG APPR.		
			MFG APPR.		
		INTERPRET GEOMETRIC TOLERANCING PER:	Q.A.		
		MATERIAL	COMMENTS:		
		FINISH			
NEXT ASSY	USED ON				
APPLICATION		DO NOT SCALE DRAWING			

PROPRIETARY AND CONFIDENTIAL
THE INFORMATION CONTAINED IN THIS DRAWING IS THE SOLE PROPERTY OF Magnalight.com. ANY REPRODUCTION IN PART OR AS A WHOLE WITHOUT THE WRITTEN PERMISSION IS PROHIBITED.

Magnalight.com

TITLE:

LED10W-4R Series

SIZE	DWG. NO.	REV
C		A

SCALE: 1:2	WEIGHT:	SHEET 1 OF 1









Material Safety Data Sheet

To Whom It May Concern,

The Larson Electronics LLC LEDLB, LED3W, LED5W, LED10W, LEDP, and LEDxxWRE industrial line of LED light bars and light fixtures without emergency battery backup are considered "ARTICLES" under 29 CFR 1910-1200, the OSHA Hazard Communication Standard, and do not require a Material Safety Data Sheet (MSDS). This document does not expire.

Articles are specifically exempt from the regulations of this standard. OSHA defines an article as follows:

1910-1200(c) – Article means a manufactured item other than a fluid or particle:

i. Which is formed to a specific shape or design during manufacture;
ii. Which has end use function(s) dependent in whole or in part upon its shape or design during end use; and
iii. Which under normal conditions does not release more than very small quantities.

Regards,

Ray Smith
Larson Electronics, LLC.

LARSON ELECTRONICS LLC • 9419 E US HWY 175 • KEMP, TX 75143
p: 1-800-369-6671 • intl: 903-498-3363 • f: 903-498-3364 • sales@larsonelectronics.com

Certification

Manufacturer: Larson Electronics LLC
Address: 9419 US-HWY 175
Kemp, Texas 75143

Declare the following equipment conforms to the standard(s) as listed:

Model: LEDLB, LED3W, LED5W, LED10W, LEDP, and LEDxxWRE Series
Description: LED Light Bars

Evaluated Listings:

CE: DIRECTIVE 2014/35/EU - LOW VOLTAGE DIRECTIVE
CE: DIRECTIVE 2014/30/EU - EMC DIRECTIVE
CE: Regulation (EC) No 1907/2006 - REACH REGULATION
CE: DIRECTIVE 2015/863/EU - ROHS DIRECTIVE

The LEDLB, LED3W, LED5W, LED10W, LEDP, and LEDxxWRE series complies with the essential protection requirements of the European Parliament of the Council Directive for Low Voltage Directive, EMC Directive, REACH Regulation, and RoHS Directive. This certification applies to all specimens manufactured in accordance to the manufacture's drawings.

Signed for and on behalf of: Larson Electronics, LLC
Place of issue: Kemp, TX

Signature: James Thomas

Name: James Thomas
Position: Operations Manager

LARSON ELECTRONICS LLC • 9419 E US HWY 175 • KEMP, TX 75143
p: 1-800-369-6671 • intl: 903-498-3363 • f: 903-498-3364 • sales@larsonelectronics.com

Certification

Manufacturer: Larson Electronics LLC
Address: 9419 US-HWY 175
Kemp, Texas 75143

Declare the following equipment conforms to the standard(s) as listed:

Model: LEDLB, LED3W, LED5W, LED10W, LEDP, and LEDxxWRE
Description: LED Light Bars

Evaluated Listings:

CE: DIRECTIVE 2015/863/EU - ROHS DIRECTIVE

This is to certify that products offered by Larson Electronics LLC comply with the Reduction of Hazardous Substances (RoHS) directives. Directive 2002/95/EC became effective on 1 July 2006. It restricts the use of six substances in the manufacture of electrical and electronic equipment. This directive was revised in June 2011 and is now referred to as directive 2011/65/EU. Directive 2015/863/EU amending Annex II to Directive 2011/65/EU announced plans to add four substances from 22 July 2019.

We hereby certify that the equipment specified above conforms to the Directive(s) by containing less of the restricted substances than the stated limits.

Signed for and on behalf of: Larson Electronics, LLC
Place of issue: Kemp, TX

Signature: James Thomas

Name: James Thomas
Position: Operations Manager

LARSON ELECTRONICS LLC • 9419 E US HWY 175 • KEMP, TX 75143
p: 1-800-369-6671 • intl: 903-498-3363 • f: 903-498-3364 • sales@larsonelectronics.com

Certification

Manufacturer: Larson Electronics LLC
Address: 9419 US-HWY 175
Kemp, Texas 75143

Declare the following equipment conforms to the standard(s) as listed:

Model: LEDLB, LED3W, LED5W, LED10W, LEDP, and LEDxxWRE Series
Description: LED Light Bars

Evaluated Listings:

CE: Regulation (EC) No 1907/2006 - REACH REGULATION

This letter establishes the opinion of Larson Electronics LLC regarding the status, under the current European Union ("EU") Regulations on Registration, Evaluation, Authorization, and Restriction of Chemical Substances ("REACH").

REACH does not apply to manufactured products which are referred to as "completed articles". Substances (chemicals) are subject to REACH registration, NOT products.

In addition, Articles are exempt from the REACH requirements if (a) the Article does not contain a substance of very high concern or candidate substance in an amount exceeding 0.1% weight by weight, and (b) if substances present in the Article in excess of 1 ton per year per importer are not expected nor intended to be released.

Based on communication with our raw material suppliers, we conclude that to the best of our knowledge our products requiring REACH compliance do not contain any of the currently listed SVHC in concentrations of 0.1% or above.

Accordingly, we foresee no registration or pre-registration requirement for the products we supply.

Signed for and on behalf of: Larson Electronics, LLC
Place of issue: Kemp, TX

Signature: James Thomas

Name: James Thomas
Position: Operations Manager

LARSON ELECTRONICS LLC • 9419 E US HWY 175 • KEMP, TX 75143
p: 1-800-369-6671 • intl: 903-498-3363 • f: 903-498-3364 • sales@larsonelectronics.com

Frequently Asked Questions (FAQ)