Larson Electronics LLC
9419 E US HWY 175, Kemp, TX 75143
Phone: 800.369.6671

www.LarsonElectronics.com
Email: sales@LarsonElectronics.com
Fax: 903.498.3364

EPL-TP-1X150LED-100

150W Explosion Proof LED Light Tower - Tripod Mount - C1D1 - 100' 16/3 SOOW Cord w/ EXP Plug

Product ID: 48487



Larson Electronics LLC manufactures a wide variety of products, including custom built to spec designs. The pictures displayed for this unit are a general representation of form factor for the product line and may not accurately represent this exact configuration in every detail due to custom builds and changes between similar products in our standard catalog. The specifics for this configuration are listed in the specification table and supporting documentation (CAD files, Dimensional Drawing, Name Plate Diagram, Wiring Diagram, etc.). This means that specific details (receptacles, plugs, wires, connections, mounting brackets, external finishes, etc.) may not be accurately represented in images vs specifications. Please review specifications and do not order based solely on images.

EPL-TP-1X150LED-100 Explosion Proof LED Tripod Tower
Listing: NRTL Listed for United States, Canada
Lamp Technology: Cree LED
Dimensions: 14"W x 16"H x 5"D - Light Head; 6.8 to 9.42 Extendible Tower
Weight: 50 lb
Voltage: 100-277 V AC, 50/60 Hz
Total Watts: 150W
Total Lumens: 21,000 lms
Luminous Efficacy: 140 Lm/W
Lamp Life: 60,000+ Hours
Color Temp: 5600K, 5000K, 4500K, 4000K, 3500K, 3000K, 2700K, or 6500K
Color Rendering Index: >75 CRI
Beam Angle: 60°, 125°, or 140°
Lighting Configuration: Flood Pattern
Power Efficiency: >95%
Power Factor: 0.992
Amps: 1.25 A @ 120 V, 0.63 A @ 240 V, 0.54 A @ 277 V
Ambient Operating Temp Range: -50°C to +65°C
Operating Temp Rating: T5
Lamp Housing Material: Copper Free Cast Aluminum
Tripod Material: Non-Sparking Aluminum Tubing w/ Rubber Casters
Lens Material: Hardened Borosilicate Glass
Gasket Material: Silicone
Mounting: Non-Sparking Wheeled Aluminum Tripod
Wiring: 100' 16/3 SOOW Cable w/ Explosion Proof Cord Cap
Cord Cap Options: 5-15P, 5-20P or 6-20P

Ratings/Approvals
Class I, Divisions 1 & 2, Groups C and D
Class II, Divisions 1 & 2, Groups E, F, & G
Class III, Divisions 1 & 2
NRTL Certified to UL 844 Ed. 13
NRTL Certified to UL 1598
NRTL Certified to C22.2 No. 137 Rev 2009
NRTL Certified to C22.2 No. 250.0
T5 Temperature Rating
Paint Spray Booth Approved
IEC 60529 Tested
IP67 Rated Waterproof
LEL Approved
Multiple Driver Banks
80% Lumen Retention after 60,000 Hours
Factory Sealed Light Fixture
Class I Div 1 Explosion Proof Plug
100 Foot 16/3 SOOW Cord
Wheeled Adjustable Tower 6.8 - 9.42 Feet
Direct Replacement for 400W MH Towers

Special Orders - Requirements
Contact us for special requirements
Toll Free: 1-800-369-6671
Intl: 1-214-616-6180
Fax: 1-903-498-3364
E-mail: sales@larsonelectronics.com

Larson Electronics LLC
9419 E US HWY 175, Kemp, TX 75143
Phone: 800.369.6671

www.LarsonElectronics.com
Email: sales@LarsonElectronics.com
Fax: 903.498.3364

Made in the USA

The EPL-TP-1X150LED-100 from Larson Electronics is a Tripod Mounted Explosion Proof LED Light Tower that produces 21,000 lumens of light capable of illuminating an area 9,500 square feet in size. This adjustable Cree LED light tower is designed for portability and durable operation and ideal for use in demanding conditions.

PLEASE NOTE: ANY FREE SHIPPING OFFERS DO NOT APPLY TO LIGHT MASTS, LIGHT TOWERS, OR TRIPODS

The EPL-TP-1X150LED-100 is a tripod mounted explosion proof LED lighting system and provides 9,500 square feet of work area coverage with 21,000 lumens of light output. This portable LED light tower has a removable LED light head mounted on top of a three leg durable non-sparking aluminum tripod equipped with wheels for easy positioning of the unit from one area of the workspace to another. The LED light head on this unit produces a wide flood pattern of light that is ideal for illuminating large workspaces and job sites. This light is designed for heavy duty use in demanding conditions including emergency services, mining, construction, marine, and industrial operations where durability and reliability is critical.

This portable LED light is comprised of an adjustable LED light head mounted atop a three leg tripod fabricated from non-sparking powder coated aluminum. This adjustable and collapsible tripod can be extended to 9.42 feet, collapsed to 6.8 feet, and includes solid wheels allow the operator to tilt the unit back and simply roll the entire assembly to a new location when fully deployed. The LED light fixture assembly can be removed by releasing the hand knob and sliding the light and mounting bracket off of the center support while the legs can be collapsed, aiding in deployment, storage and transport. The lamp can be easily adjusted vertically and locked into position.



Click Photo to Enlarge

Click Photo to Enlarge

Click Photo to Enlarge

LED Benefits: Unlike gas burning and arc type lamps that have glass bulbs, LEDs have no filaments or fragile housings to break during operation and/or transportation. Instead of heating a small filament or using a combination of gases to produce light, light emitting diodes (LEDs) use semi-conductive materials that illuminate when electric current is applied, providing instant illumination with no warm up or cool down time before re-striking. Because there is no warm up period, this light can be cycled on and off with no reduction in lamp life.

LED lights run at significantly cooler temperatures than traditional metal halide and high pressure sodium lights and contain no harmful gases, vapors, or mercury, making them both safer and more energy efficient. No extra energy is wasted in cooling enclosed work areas due to external heat emissions from bulb type lights, and the operator risks associated with traditional lighting methods, such as accidental burns and exposure to hazardous substances contained in the glass bulbs, are eliminated. In addition, LEDs are also safer for the environment as they are 100% recyclable, which eliminates the need for costly special disposal services required with traditional gas burning and arc type lamps.

LED Drivers: Even in LED fixtures, heat is the single largest factor in premature light failure and color shifting. As a result, many manufacturers reduce the output of their LEDs in order to reduce the amount of heat produced. Rather than lower light output or quality, Larson Electronics addresses this problem with the addition of electronic LED drivers. These internal drivers provide the ability to automatically monitor and adjust input current to maintain the correct LED voltage levels regardless of input levels across a specific range. This not only reduces the energy dissipation, effectively lowering the operating temperature of the fixture, but also prevents AC over-voltage

and short circuit loading making this fixture virtually maintenance free. Because the electronic drivers allow the EPL-QP-1X150RT-100 to run at a cooler internal temperature and regulates the electrical current, energy efficiency and LED service hours are maximized while at the same time reducing operating costs and downtime incurred from the frequent servicing intervals required with other hotter running lights. The explosion proof LED light fixture features multiple LED drivers which helps to increase the operational life of the fixture. With traditional LED lights, in the event an LED array or driver fails, the entire fixture no longer illuminates. This new series of LED lamps contains twelve individual LED boards configured in a series of banks. Each bank contains two LED boards with an individual driver. In the event of a driver failure, only one bank of LEDs will be effected while the other banks will continue to operate. In the event that of an LED failure, the mating LED will continue to operate.

Click Photos to Enlarge



60° Beam Angle



125° Beam Angle



140° Beam Angle

Beam Angles: When used as a portable lighting solution, the varying beam angles are each individually ideal for several environments. The 60° beam provides the most intense beam of the three options. It is perfect for narrow, confined spaces and is ideally suited for tank cleaning purposes. It offers focused light to provide ample illumination to tight work spaces and other environments. The 125° beam offers a more diffused source of light that is also less intense in brightness. It is a great general area work light and performs well when used for outdoor illumination. The 140° beam offers a very wide lighting pattern and is ideal for situations where lighting distance is not a concern, but illumination of a wider area and even light distribution is. The 140° beam is great for situations that call for working in close proximity to lights such as in a paint booth.

Click Photos to Enlarge



5-15 Straight Blade Plug



5-20 Straight Blade Plug



6-20 Straight Blade Plug

Wiring & Plug: This explosion proof flood light is equipped with 100 feet of 16/3 chemical and abrasion resistant SOOW cord that is fitted with an explosion proof cord cap for easy connection to explosion proof outlets. Plug options include a 5-15 15 amp straight blade plug for use with 120V explosion proof outlets, a 5-20 20 amp straight blade plug for use with 120V explosion proof outlets, or a 6-20 20 amp straight blade plug for use with 220-240V explosion proof outlets. ***PLEASE NOTE** voltage ratings on plugs and outlets are MAXIMUM voltage. For low voltage applications, proper voltage must be applied to the outlet or damage to the light fixture will occur.*
This unit produces 21,000 lumens with a color temperature of 5600K standard and a color rendering index of 75 which produces colors and details much more accurately than high pressure sodium or mercury vapor luminaries. We also offer both 3000K

warm white and 4500K natural white color temperature options (longer lead times may apply for non-standard temperatures). This lamp uses Cree LED units that have been chosen for their high lumen per watt ratio and extreme longevity. These Cree LEDs generate a robust 140 lumens per watt effective lumen output and have a 80% lumen retention at 60,000 hours, giving them better efficiency and operational life than traditional light sources.

Field Serviceability: This explosion proof LED light fixture is field serviceable. All major internal components can be purchased from Larson Electronics and installed by a licensed electrician with basic tools. With most explosion proof fixtures, the fixture must be returned to the manufacturer for repair work, which presents downtime and long turn around times for repair work. Larson Electronics addresses this issue with the EPL-QP-1X150RT-100 series with field serviceability, allowing operators to perform service work without having to return the fixture to the manufacturer in the event of damage or failure.

Voltage: This explosion proof LED light is universal voltage capable and can be operated with 100-277V AC, 50/60 Hz without modifications to the fixture. A low voltage version of this LED fixture that operates on AC/DC voltages from 11-25 volts is also available. 18-48V AC/DC voltage models are available for network systems and marine vessels. We also offer an additional 347-480V high voltage, 125-250V DC, and 0-10V dimmable versions of this explosion proof LED light fixture.

Tower Mount: This unit is mounted on an aluminum tripod with anti-static urethane wheels for seamless transportation around the work site. The light tower can be extended to a maximum height of 9.42 feet and retracted down to 6.8 feet. Components used for height adjustments during deployment are conveniently located at chest level, allowing operators to make changes to lighting setups and configurations with ease. This tripod is suitable for portable, temporary, and stationary mounting of equipment. A round-pole design makes the assembly easier to handle and transport compared to square-shaped models.

A horizontal T-mount platform is provided at the top of the tower for mounting customer-provided equipment. The tripod features a rotatable head for quick repositioning of mounted equipment, without needing to turn the base legs or entire tower. To adjust the vertical tilt and position of mounted fixtures, operators simply loosen both brackets (located at both sides of the light). After the desired position is achieved, the brackets are tightened. An accessible hand knob can be used to remove the mounted fixture for storage or transportation.

The base of the lightweight tower consists of three 49.1" legs, with an even 120° spread for a balanced foundation. All three legs are fold-able, which caters to space-saving requirements during storage and allows the assembly to pass through tight spaces. Unlike tripods with bent or L-shaped legs, this portable light tower incorporates a flat foundation for a sturdy base. The tower`s base is also equipped with two wheels for freedom of movement at industrial facilities, as well as streamlined setup and tear-down at remote work sites. Removal of the wheel kit can be completed without special tools.

All tripods are in stock and ready to be shipped for customers with immediate lighting or mounting needs. For fast and cost-effective deliveries, the entire light tower assembly can be shipped via UPS. Freight and expedited hotshots commonly associated with light mast deliveries are not needed for this compact tower.

This explosion proof LED light fixture is IP67 rated, dust-proof, and protected against high pressure jets and temporary submersion. The cast aluminum body and LED lamp give this light excellent durability and resistance to vibration and impacts. The housing is specially designed to dissipate heat which increases the efficiency and lifespan of the LEDs and electronics. This LED light produces 21,000 lumens with a color temperature of 5000K, 4000K, or 3000K and a color rendering index of 75 which produces colors and details much more accurately than high pressure sodium or mercury vapor portable work lights. This LED light tower retains 80% of its lumen output after 60,000 hours of use, far longer than metal halide or halogen work lamps.

The LED light head on this unit is small enough to allow it to fit through most standard size manholes and entry points. The LED light head can also be removed from the tripod, the tower collapsed and the entire assembly passed through a manhole and reassembled once inside. The easy to collapse design of this Class I Division 1 LED

work light allows Larson Electronics to avoid pallet freight charges when shipping and deliver these units via UPS next day air service, which in turn improves delivery time and reduces the cost to buyers.

Energy Consumption Comparison

	Metal Halide	LED
Wattage	400 watts	150 watts
Amp Draw @ 120V AC	3.83 amps	1.25 amps
Amp Draw @ 220V AC	2.09 amps	0.68 amps
Amp Draw @ 240V AC	1.92 amps	0.63 amps
Amp Draw @ 277V AC	1.66 amps	0.54 amps
Amp Draw @ 12V DC	38.33 amps	12.5 amps
Amp Draw @ 24V DC	19.12 amps	6.25 amps
Lamp Life Expectancy	20,000 hours	60,000+ hours
Operation cost per year (12hs/day @ 12c/kWh)	$241.78	$78.84

Each LED light tower has the potential to save $150.00+ per year in electricity alone, not including maintenance costs, operational downtime, reduced productivity, HVAC loads, or carbon footprint. When retrofitting an entire facility with 100s of light fixtures, the return on investment of LED over metal halide becomes evident.

At Larson Electronics, we do more than meet your lighting needs. We also provide replacement, retrofit, and upgrade parts as well as industrial grade power accessories. Our craftsmen can custom build any lighting system and/or accessories to fit the unique demands of your operation. A commitment to honesty, quality, and dependability has made Larson Electronics a leader in the lighting and electronics business since 1973. Contact us today at 800-369-6671 or message sales@larsonelectronics.com for more information about our custom options tailored to meet your specific industry needs.

REV	DESCRIPTION	DATE
A	PRODUCTION RELEASE	08-31-2023

EPL-TP-1X150LED-100-1523-140B-65K

LARSON ELECTRONICS®

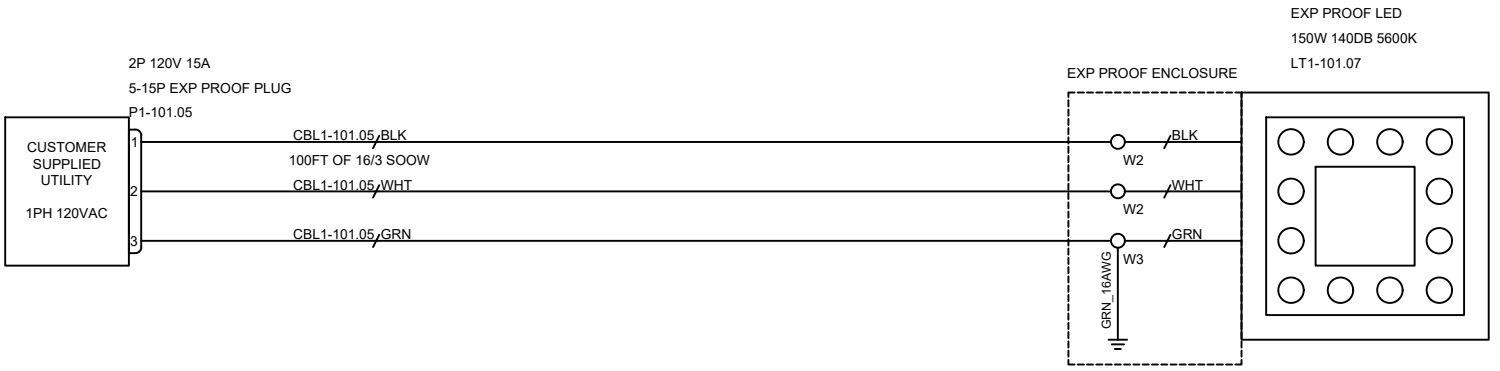

TAGS	QTY	CATALOG	DESCRIPTION
P1-101.05	1	UNV00005389	5-15P EXPLOSION PROOF PLUG 125V 15A
LT1-101.07	1	UNV00007990	150W LED EXPLOSION PROOF LIGHT 120-277V 140DB
W3	1	UNV00011954	3 HOLE WAGO
W2	2	UNV00009802	2 HOLE WAGO
CBL1-101.05	100FT	UNV00007524	16/3 SOOW CABLE

LARSON ELECTRONICS
9419 E US HWY 175,
KEMP, TX 75143

TITLE: EPL-TP-1X150LED-100-1523-140B-65K

DRAWN BY	DATE	REV
J.Maldonado	08-31-2023	A
CHECKED BY	SHEET #	DRAWING #
S.Desai	1 OF 1	101

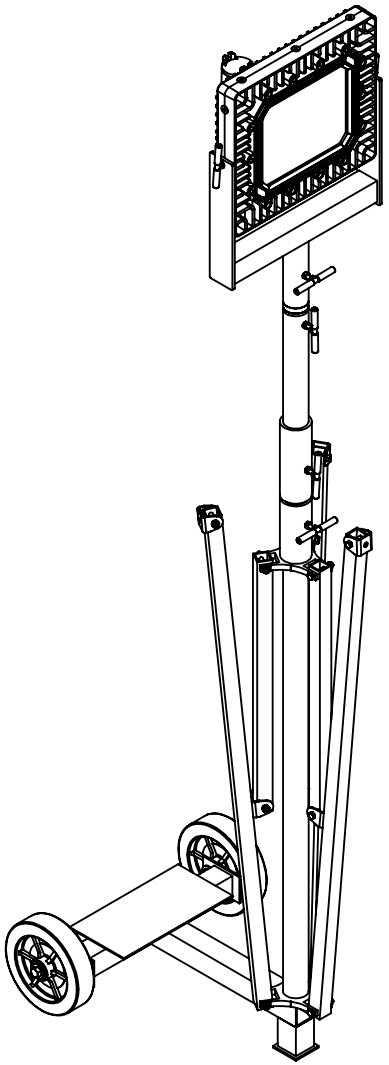

LARSON ELECTRONICS

TITLE:

EPL-TP-1X150LED-100

FINISH			
SURFACE AREA [sq. in]			NAME
DIMENSIONS ARE IN INCHES		DRAWN	CHRISTOPHER THAUER
MATERIAL		CHECKED	N/A
DO NOT SCALE DRAWING		DATE	12/24/2020

SIZE **A** | DWG. NO. | REV

SCALE: NTS | SHEET 1 OF 5

PROPRIETARY AND CONFIDENTIAL
THE INFORMATION CONTAINED IN THIS DRAWING IS THE SOLE PROPERTY OF LARSON ELECTRONICS LLC. ANY REPRODUCTION IN PART OR AS A WHOLE WITHOUT THE WRITTEN PERMISSION OF LARSON ELECTRONICS LLC IS PROHIBITED.

UNLESS OTHERWISE NOTED:

Angle	+/- .5 deg
.X	+/- .02
.XX	+/- .01
.XXX	+/- .005

ITEM NO.	PART NAME	DWG. NO.	QTY.
1	Wheel Base Welding		1
2	Wheel		2
3	1/2-13 x 3-1/2 Hex Bolt		2
4	1/2-13 Hex Nut		2
5	1/2 Flat Washer		4

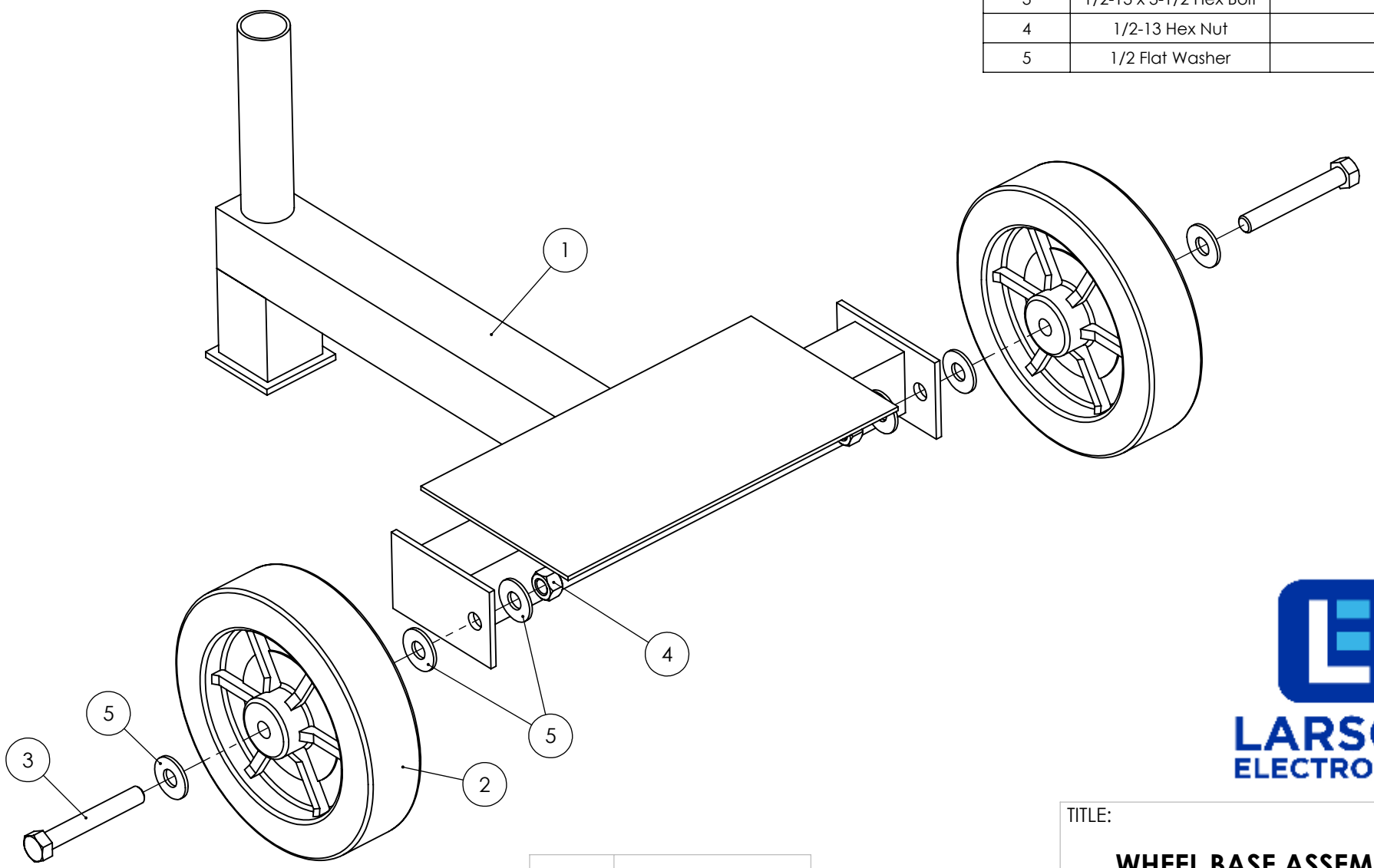

LARSON ELECTRONICS

PROPRIETARY AND CONFIDENTIAL
THE INFORMATION CONTAINED IN THIS DRAWING IS THE SOLE PROPERTY OF LARSON ELECTRONICS LLC. ANY REPRODUCTION IN PART OR AS A WHOLE WITHOUT THE WRITTEN PERMISSION OF LARSON ELECTRONICS LLC IS PROHIBITED.

UNLESS OTHERWISE NOTED:
Angle +/- .5 deg
.X +/- .02
.XX +/- .01
.XXX +/- .005

FINISH			
SURFACE AREA [sq. in]			NAME
DIMENSIONS ARE IN INCHES		DRAWN	CHRISTOPHER THAUER
MATERIAL		CHECKED	N/A
DO NOT SCALE DRAWING		DATE	12/24/2020

TITLE:

WHEEL BASE ASSEMBLY

SIZE	DWG. NO.	REV
A		

SCALE: NTS | SHEET 2 OF 5

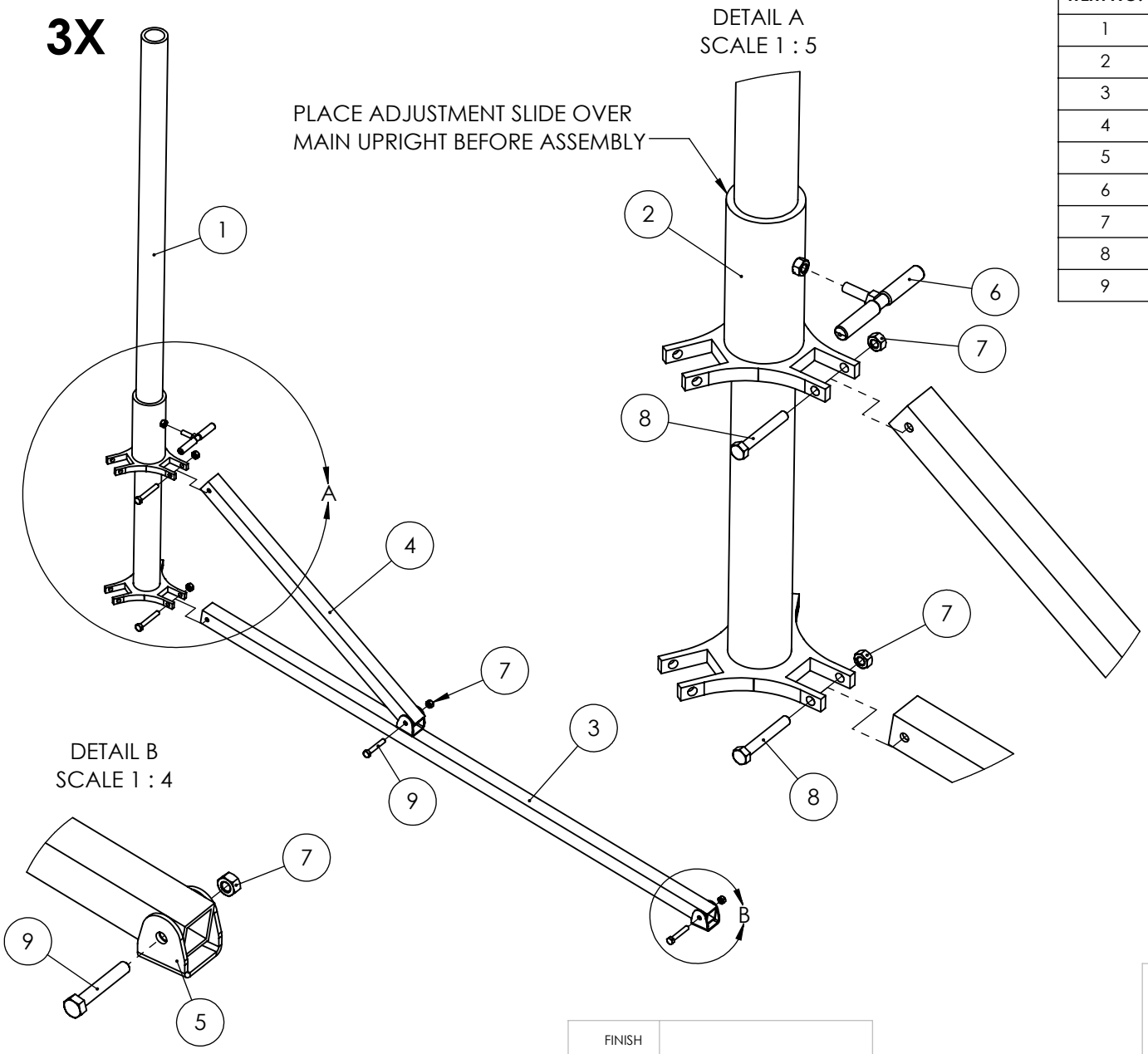

ITEM NO.	PART NAME	DWG. NO.	QTY.
1	Main Upright		1
2	Adjustment Slide		1
3	Leg Weld		3
4	2' Leg		3
5	Quadpod Hinge		3
6	T-Handle		1
7	5/16-18 Hex Nut		12
8	5/16-18 x 2-1/4 Hex Bolt		6
9	5/16-18 x 2 Hex Bolt		6

LARSON ELECTRONICS

PROPRIETARY AND CONFIDENTIAL
THE INFORMATION CONTAINED IN THIS DRAWING IS THE SOLE PROPERTY OF LARSON ELECTRONICS LLC. ANY REPRODUCTION IN PART OR AS A WHOLE WITHOUT THE WRITTEN PERMISSION OF LARSON ELECTRONICS LLC IS PROHIBITED.

UNLESS OTHERWISE NOTED:

Angle	+/- .5 deg
.X	+/- .02
.XX	+/- .01
.XXX	+/- .005

FINISH			
SURFACE AREA [sq. in]			NAME
DIMENSIONS ARE IN INCHES		DRAWN	CHRISTOPHER THAUER
MATERIAL		CHECKED	N/A
DO NOT SCALE DRAWING		DATE	12/24/2020

TITLE:

LEG ASSEMBLY

SIZE	DWG. NO.	REV
A		

SCALE: NTS

SHEET 3 OF 5

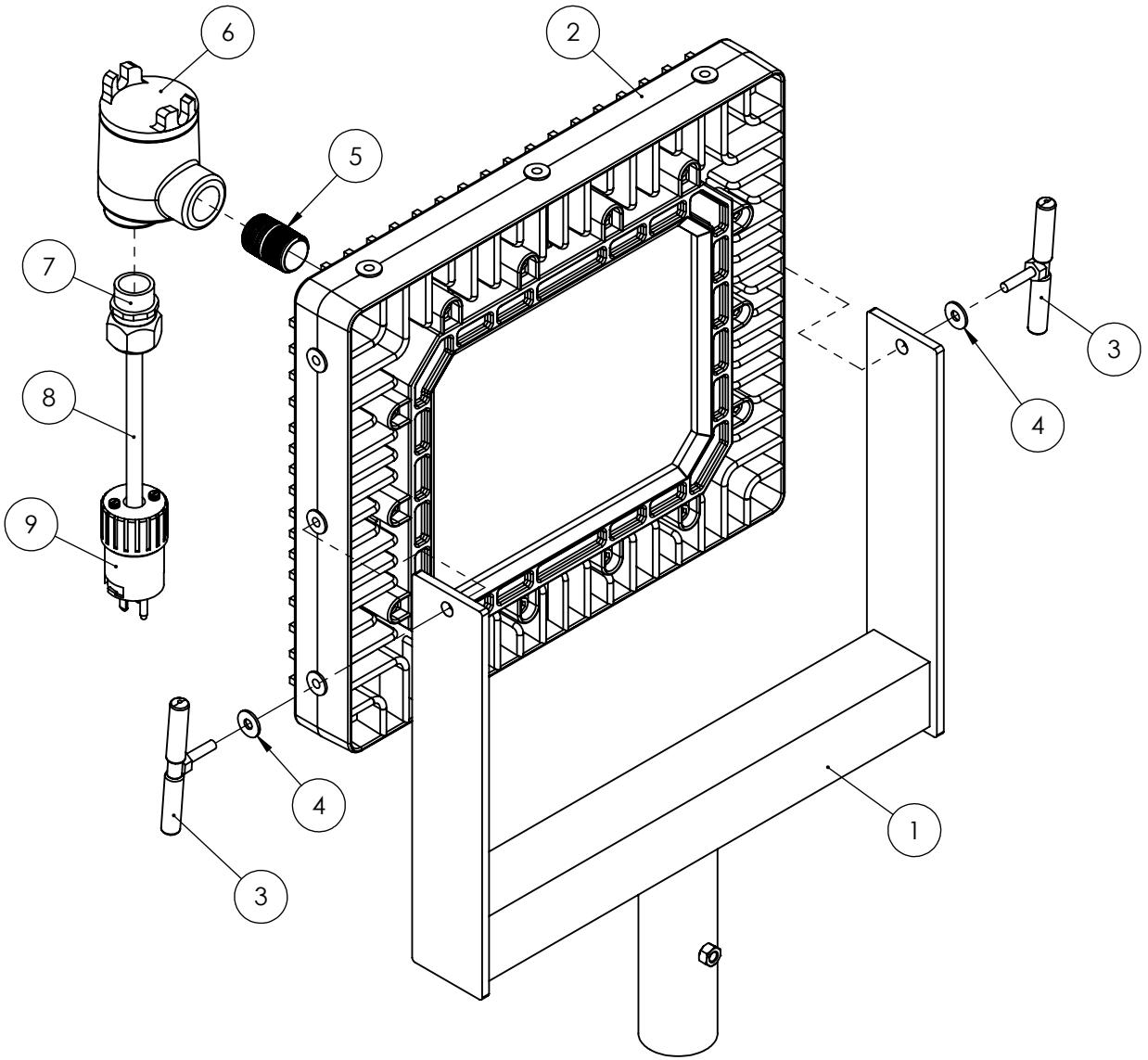

ITEM NO.	PART NAME	DWG. NO.	QTY.
1	Head Weld		1
2	EPL-HB-150LED-RT		1
3	T-Handle		2
4	1/4 Flat Washer		2
5	3/4 x 1-1/2 Nipple		1
6	EPJ-2-0.75IN		1
7	CGB-75-PNK		1
8	SOOW Cord		1
9	EPP-15A		1
10	XLE-04254-1X		3

LARSON ELECTRONICS

PROPRIETARY AND CONFIDENTIAL
THE INFORMATION CONTAINED IN THIS DRAWING IS THE SOLE PROPERTY OF LARSON ELECTRONICS LLC. ANY REPRODUCTION IN PART OR AS A WHOLE WITHOUT THE WRITTEN PERMISSION OF LARSON ELECTRONICS LLC IS PROHIBITED.

UNLESS OTHERWISE NOTED:
Angle +/- .5 deg
.X +/- .02
.XX +/- .01
.XXX +/- .005

FINISH			
SURFACE AREA [sq. in]			NAME
DIMENSIONS ARE IN INCHES		DRAWN	CHRISTOPHER THAUER
MATERIAL		CHECKED	N/A
DO NOT SCALE DRAWING		DATE	12/24/2020

TITLE:

HEAD ASSEMBLY

SIZE	DWG. NO.	REV
A		

SCALE: NTS

SHEET 4 OF 5

ITEM NO.	PART NAME	DWG. NO.	QTY.
1	Wheel Base Assembly		1
2	Leg Assembly		1
3	Extender		1
4	Upright Extension		1
5	Head Assembly		1
6	T-Handle		3

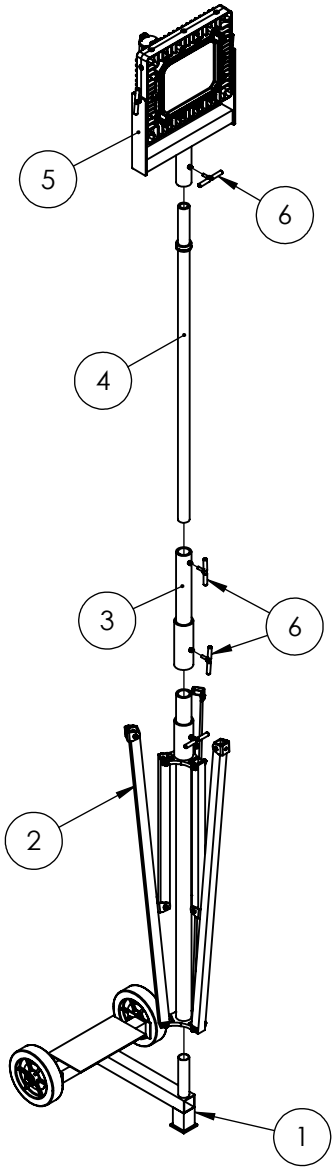

LARSON ELECTRONICS

TITLE:

FINAL ASSEMBLY

PROPRIETARY AND CONFIDENTIAL
THE INFORMATION CONTAINED IN THIS DRAWING IS THE SOLE PROPERTY OF LARSON ELECTRONICS LLC. ANY REPRODUCTION IN PART OR AS A WHOLE WITHOUT THE WRITTEN PERMISSION OF LARSON ELECTRONICS LLC IS PROHIBITED.

UNLESS OTHERWISE NOTED:

Angle	+/- .5 deg
.X	+/- .02
.XX	+/- .01
.XXX	+/- .005

FINISH			
SURFACE AREA [sq. in]			NAME
DIMENSIONS ARE IN INCHES		DRAWN	CHRISTOPHER THAUER
MATERIAL		CHECKED	N/A
DO NOT SCALE DRAWING		DATE	12/24/2020

SIZE	DWG. NO.	REV
A		

SCALE: NTS | SHEET 5 OF 5









Certification

Manufacturer: Larson Electronics LLC
Address: 9419 US-HWY 175
Kemp, Texas 75143

Declare the following equipment conforms to the standard(s) as listed:

Model: EPL-XX-150RT, EPL-XX-150LED Series
Description: Explosion Proof Portable LED Light

Evaluated Listings:

ETL: NEC / United States standards
ETL: CEC / Canada standards
ETL: Modifications to under UL 1203, UL 508A – NEC / United States standards
ETL: Modifications to under CSA C22.2 No. 14, No. 30, No. 25– CEC / Canadian standards

The EPL-XX-150RT, EPL-XX-150LED Series is certified to NEC, CEC, ATEX, and IEC Ex standards for hazardous locations for:

- NEC: Class I, Divisions 1&2, Groups , D; Class II, Divisions 1&2, Groups E, F, G
- CEC: Class I, Divisions 1&2, Groups C, D; Class II, Divisions 1&2, Groups E, F, G

The EPL-XX-150RT, EPL-XX-150LED Series is comprised of an EPL-HB-150LED-RT series light head assembly. The light head may be fitted with external wiring device box and/or accessories, portable power cord, and plug attachment that utilize components listed for hazardous locations. The light head assembly may be mounted to a non-sparking aluminum or galvanized steel structure. This assembly is built to NEC and CEC standards for hazardous locations per UL 1203 and CSA C22.2 No 30, No. 25.

Signed for and on behalf of: Larson Electronics, LLC
Place of issue: Kemp, TX

Signature: James Thomas

Name: James Thomas
Position: Operations Manager

LARSON ELECTRONICS LLC • 9419 E US HWY 175 • KEMP, TX 75143
p: 1-800-369-6671 • intl: 903-498-3363 • f: 903-498-3364 • sales@larsonelectronics.com

intertek
Total Quality. Assured.



<- Back

Product Description

Title:	INDUSTRIAL CONTROL PANELS
Company:	LARSON ELECTRONICS LLC - Kemp, TX USA
Product Information:	Industrial Control Panels For General Use.
Evaluated to the following:	A representative sample of the listed devices have been tested, investigated and found to comply with the requirements of the Standard(s) for Industrial Control Panels (UL-508A) and are identified with the ETL Listed Mark.

<- Back

Contact Us

ETL listed products that are in doubt or for products that do not appear in the directory, please request a verification of certification.
Americas+1-888-347-5478 (or +1-847-660-7407)
Email etldirectory@intertek.com

Intertek Home
Product Directories
DLP on mobile devices

Inspector Center

Get up-to-date information on everything from our Accreditations to our Certifications and Marks. Learn more...

News

Intertek Unveils New Design for Product Safety and Quality Certification Marks. Learn more...

© 2010 Intertek All Rights Reserved.
All other product or service names are the property of their respective owners.

intertek
Total Quality. Assured.



<- Back

Product Description

Title:	EXPLOSION-PROOF & DUST IGNITION-PROOF ELECTRICAL EQUIPMENT FOR USE IN HAZARDOUS (CLASSIFIED) LOCATIONS
Company:	LARSON ELECTRONICS LLC - Kemp, TX USA
Product Information:	Explosion-proof or dust-ignition-proof Industrial Control Panels for use in Hazardous (Classified) Locations, Model Nos. Custom Industrial Control Panels
Evaluated to the following:	A representative sample of the listed devices have been tested, investigated and found to comply with the requirements of the Standard(s) for Explosion-Proof and Dust Ignition-Proof Electrical Equipment for Use in Hazardous (Classified) Locations (UL-1203) and are identified with the ETL Listed Mark.

<- Back

Contact Us

ETL listed products that are in doubt or for products that do not appear in the directory, please request a verification of certification.
Americas+1-888-347-5478 (or +1-847-660-7407)
Email
etldirectory@intertek.com

Intertek Home
Product Directories
DLP on mobile devices

Inspector Center

Get up-to-date information on everything from our Accreditations to our Certifications and Marks. Learn more...

News

Intertek Unveils New Design for Product Safety and Quality Certification Marks. Learn more...

© 2010 Intertek All Rights Reserved.
All other product or service names are the property of their respective owners.

intertek
Total Quality. Assured.

<- Back

Product Description

Title:	INDUSTRIAL CONTROL EQUIPMENT
Company:	LARSON ELECTRONICS LLC - Kemp, TX USA
Product Information:	Industrial Control Panels For General Use. Industrial Control Panels Relating to Hazardous (Classified) Locations, Custom Industrial Control Panels. Power Distribution System, Model Nos. MGL, MPD, MGS series; Followed by AAK-PBB.FFF-SCC.GGG-EEXCCC.DDD; Where AA = 2,3,5,7,9,15,20,25,30,45,50,75; BB = 1P, 3P; FFF = 480,240,208,120; CC = 1P,3P; GGG = 480,240,208,120; EE = # of outlets; CCC = voltage; DDD = outlet amperage.
Evaluated to the following:	A representative sample of the listed devices have been tested, investigated and found to comply with the requirements of the Standard(s) for Industrial Control Equipment (CAN/CSA-C22.2 No. 14) and are identified with the cETL Listed Mark.

<- Back

Contact Us

ETL listed products that are in doubt or for products that do not appear in the directory, please request a verification of certification.
Americas+1-888-347-5478 (or +1-847-660-7407)
Email
etldirectory@intertek.com

Intertek Home
Product Directories
DLP on mobile devices

Inspector Center

Get up-to-date information on everything from our Accreditations to our Certifications and Marks. Learn more...

News

Intertek Unveils New Design for Product Safety and Quality Certification Marks. Learn more...

© 2010 Intertek All Rights Reserved.
All other product or service names are the property of their respective owners.

intertek
Total Quality. Assured.

<- Back

Product Description

Title:	ENCLOSURES
Company:	LARSON ELECTRONICS LLC - Kemp, TX USA
Product Information:	Explosion-proof or dust-ignition-proof Industrial Control Panels for use in Hazardous (Classified) Locations, Model Nos. Custom Industrial Control Panels Luminaires, Model Nos. EPL-48-2L-LED-SFC, EPL-24-2L-LED-SFC. for use in Hazardous Locations: Class I, Div. 1, Groups C and D T5 or T6 -20°C < Tamb < 40°C Class II, Div. 1., Groups E, F, and G; Class III Div.1 T3B -20°C < Tamb < 40°C
Evaluated to the following:	A representative sample of the listed devices have been tested, investigated and found to comply with the requirements of the Standard(s) for Enclosures for use in Class II, Groups E, F, G Hazardous Locations (CAN/CSA-C22.2 No. 25) and are identified with the cETL Listed Mark.

<- Back

Contact Us

ETL listed products that are in doubt or for products that do not appear in the directory, please request a verification of certification.
Americas+1-888-347-5478 (or +1-847-660-7407)
Email etldirectory@intertek.com

Intertek Home
Product Directories
DLP on mobile devices

Inspector Center

Get up-to-date information on everything from our Accreditations to our Certifications and Marks. Learn more...

News

Intertek Unveils New Design for Product Safety and Quality Certification Marks. Learn more...

© 2010 Intertek All Rights Reserved.
All other product or service names are the property of their respective owners.

intertek
Total Quality. Assured.



<- Back

Product Description

Title:	EXPLOSION-PROOF ENCLOSURES FOR USE IN CLASS I HAZARDOUS LOCATIONS
Company:	LARSON ELECTRONICS LLC - Kemp, TX USA
Product Information:	Explosion-proof or dust-ignition-proof Industrial Control Panels for use in Hazardous (Classified) Locations, Model Nos. Custom Industrial Control Panels
Evaluated to the following:	A representative sample of the listed devices have been tested, investigated and found to comply with the requirements of the Standard(s) for Explosion-Proof Enclosures for Use in Class I Hazardous Locations (CAN/CSA-C22.2 No. 30) and are identified with the cETL Listed Mark.

<- Back

Contact Us

ETL listed products that are in doubt or for products that do not appear in the directory, please request a verification of certification.
Americas+1-888-347-5478 (or +1-847-660-7407)
Email
etldirectory@intertek.com

Intertek Home
Product Directories
DLP on mobile devices

Inspector Center

Get up-to-date information on everything from our Accreditations to our Certifications and Marks. Learn more...

News

Intertek Unveils New Design for Product Safety and Quality Certification Marks. Learn more...

© 2010 Intertek All Rights Reserved.
All other product or service names are the property of their respective owners.

Material Safety Data Sheet

To Whom It May Concern,

Larson Electronics LLC EHL, EPL, EPLC2, HAL, HALP, HALD, HAL-LI, HALS, and HALSS industrial line of LED lights without emergency backup for hazardous locations are considered "ARTICLES" under 29 CFR 1910-1200, the OSHA Hazard Communication Standard, and do not require a Material Safety Data Sheet (MSDS).

Articles are specifically exempt from the regulations of this standard. OSHA defines an article as follows:

1910-1200(c) – Article means a manufactured item other than a fluid or particle:

i. Which is formed to a specific shape or design during manufacture;
ii. Which has end use function(s) dependent in whole or in part upon its shape or design during end use; and
iii. Which under normal conditions does not release more than very small quantities.

The "hazardous location" and "explosion proof" are terminology for the environment where these products will be installed. This is not to be confused with "hazardous materials;" this product does not contain any hazardous materials.

Regards,



Ray Smith
Larson Electronics, LLC.

LARSON ELECTRONICS LLC • 9419 E US HWY 175 • KEMP, TX 75143
p: 1-800-369-6671 • intl: 903-498-3363 • f: 903-498-3364 • sales@larsonelectronics.com

intertek
Total Quality. Assured.

<- Back

Product Description

Title: ELECTRIC LIGHTING FIXTURES FOR USE IN HAZARDOUS (CLASSIFIED) LOCATIONS

Company: LARSON ELECTRONICS LLC - Kemp, TX USA

Product Information: Trade Name(s): Magna Light.

LED Flood Light, Model Nos. EPLC2-HB-150LED-RT, EPLC2-LED-150W-RT, EPLC2-WPLED-150W-RT, EPLC2-HB-150LED-RT-48, EPLC2-HB-100LED-RT, EPLC2-HB-100LED-RT-UVA, EPL-HB-150LED-RT, EP-LED-150W-RT, EPL-WPLED-150W-RT, EPL-HB-150LED-RT-48, EPL-HB-100LED-RT, EPL-HB-100LED-RT-UVA, AL-12-IPS-LED-1224DC, HAL-24-IPS-LED-1224DC, HAL-36-IPS-LED-1224DC, HAL-48-IPS-LED-1224DC; followed by -UVA, -UVB, -UVC, -IR, -C, -VISUV, -VISIR, -VISRED, -VISBLU, -VISGRN, -VISAMB, -27K, -30K, -40K, -45K, -50K, -55K, -56K, -60K, -65K, -DAYLIGHT, -750NM, -770NM, -850NM, -940NM, -1550NM, -RED, -BLU, -GRN, -AMB, or -PRPL.

LED Fixed Lighting suitable for used in Class I, Division 1, Groups C, D. Class I, Division 2, Groups A, B, C & D, T6, -25°C to +40°C., Model Nos. EPL-LP-12-LED-SFC, EPL-LP-24-LED-SFC, EPL-LP-48-LED-SFC.LED Fixed Lighting suitable for used in Class I Division 1 Group B C and D, Class I Division 2 Group A B C and D, Class II Division 1 Group E F and G, Class II Division 2 Group F and G and Class III hazardous locations, T6, -25°C to +40°C., Model Nos. EPL-HB-100LED-RT, EPL-HB-150LED-RT, EPL-HB-200LED-RT, EPL-HB-240LED-RT, EPL-HB-300LED-RT.

LED Light, Model Nos. HAL-7W-LED-XX-Y-ZZZ, HAL-XX-YYY-LED-XX-T-ZZZZ, HAL-31L-LV-XX-Y-ZZZZ, HAL-60W-HV-XX-Y-ZZZZ.

LED Luminaire for use in Class I, Division 1&2, Groups C&D, T5 Hazardous Location, Model Nos. EPL-HB-50LED-RT; followed by -CM, -STNCH, -PT, -WM or -CLG; followed by -1227 or -1224; followed by -60DB, -100DB or -140DB; followed by -30K, -40K or -50K. EPL-HB-50LED-RT; followed by -CM, -STNCH, -PT, -WM, -CLG; followed by -1347 or -347V; followed by -60DB, -100DB or -140DB; followed by -30K, -40K or -50K. EPL-HB-50LED-RT; followed by -CM, -STNCH, -PT, -WM, -CLG; followed by -3480 or -480V; followed by -60DB, -100DB or -140DB; followed by -30K, -40K or -50K.

Luminaires, Model Nos. HAL-48-1L-LED-BMSW, HAL-48-2L-LED-BMSW, HAL-48-3L-LED-BMSW, HAL-24-1L-LED-BMSW, HAL-24-2L-LED-BMSW, HAL-24-3L-LED-BMSW. For use in Hazardous Locations, Class I, Division 2, Groups A, B, C and D; T3C, T4A or T5 -20°C < Tamb < 40°C.

Luminaires, Model Nos. EPL-48-2L-LED-SFC, EPL-24-2L-LED-SFC. for use in Hazardous Locations: Class I, Div. 1, Groups C and D T5 or T6 -20°C < Tamb < 40°C Class II, Div. 1., Groups E, F, and G; Class III Div.1 T3B -20°C < Tamb < 40°C

Contact Us
ETL listed products that are in doubt or for products that do not appear in the directory, please request a verification of certification.
Americas+1-888-347-5478 (or +1-847-660-7407)
Email etldirectory@intertek.com

Intertek Home
Product Directories
DLP on mobile devices

Inspector Center
Get up-to-date information on everything from our Accreditations to our Certifications and Marks. Learn more...

News
Intertek Unveils New Design for Product Safety and Quality Certification Marks. Learn more...

Evaluated to the following:	A representative sample of the listed devices have been tested, investigated and found to comply with the requirements of the Standard(s) for Electric Lighting Fixtures for Use in Hazardous (Classified) Locations (UL-844) and are identified with the ETL Listed Mark.

<- Back

© 2010 Intertek All Rights Reserved.
All other product or service names are the property of their respective owners.

intertek
Total Quality. Assured.

<- Back

Product Description

Title: LUMINAIRES

Company: LARSON ELECTRONICS LLC - Kemp, TX USA

Product Information: Trade Name(s): Magna Light.

Fixed Luminaires, Model Nos. EPL-HB-100LED-RT, EPL-HB-150LED-RT, EPL-HB-200LED-RT, EPL-HB-240LED-RT, EPL-HB-300LED-RT, EPL-EMG-LB-100LED-RT, EPL-EMG-LB-150LED-RT, EPL-EMG-LB-200LED-RT.

LED Flood Light, Model Nos. EPLC2-HB-150LED-RT, EPLC2-LED-150W-RT, EPLC2-WPLED-150W-RT, EPLC2-HB-150LED-RT-48, EPLC2-HB-100LED-RT, EPLC2-HB-100LED-RT-UVA, EPL-HB-150LED-RT, EPL-LED-150W-RT,
EPL-WPLED-150W-RT, EPL-HB-150LED-RT-48, EPL-HB-100LED-RT, EPL-HB-100LED-RT-UVA.

LED Light, Model Nos. HAL-7W-LED-XX-Y-ZZZ, HAL-XX-YYY-LED-XX-T-ZZZZ, HAL-31L-LV-XX-Y-ZZZZ, HAL-60W-HV-XX-Y-ZZZZ.

Luminaires, Model Nos. HAL-48-1L-LED-BMSW, HAL-48-2L-LED-BMSW, HAL-48-3L-LED-BMSW, HAL-24-1L-LED-BMSW, HAL-24-2L-LED-BMSW, HAL-24-3L-LED-BMSW. For use in Hazardous Locations, Class I, Division 2, Groups A, B, C and D; T3C, T4A or T5 -20°C < Tamb < 40°C.

Luminaires, Model Nos. EPL-48-2L-LED-SFC, EPL-24-2L-LED-SFC. for use in Hazardous Locations: Class I, Div. 1, Groups C and D T5 or T6 -20°C < Tamb < 40°C Class II, Div. 1., Groups E, F, and G; Class III Div.1 T3B -20°C < Tamb < 40°C

Surface-mounted Luminaire, Model Nos. EPL-LP-12-LED-SFC, EPL-LP-12-LED-SFC, EPL-LP-12-LED-SFC, EPL-LP-12-LED-SFC, EPL-LP-24-LED-SFC, EPL-LP-24-LED-SFC, EPL-LP-24-LED-SFC, EPL-LP-24-LED-SFC, EPL-LP-48-LED-SFC, EPL-LP-48-LED-SFC, EPL-LP-48-LED-SFC, EPL-LP-48-LED-SFC.

Wall mounted luminaire, Model Nos. EPL-HB-50LED-RT; followed by -CM, -STNCH, -PT, -WM or -CLG; followed by -1227 or -1224; followed by -60DB, -100DB or -140DB; followed by -30K, -40K or -50K. EPL-HB-50LED-RT; followed by -CM, -STNCH, -PT, -WM or -CLG; followed by -1347 or -347V; followed by -60DB, -100DB or -140DB; followed by -30K, -40K or -50K. EPL-HB-50LED-RT; followed by -CM, -STNCH, -PT, -WM or -CLG; followed by -3480 or -480V; followed by -60DB, -100DB or -140DB; followed by -30K, -40K or -50K.

Evaluated to the following: A representative sample of the listed devices have been tested, investigated and found to comply with the requirements of the Standard(s) for Luminaires (UL-1598) and are identified with the ETL Listed Mark.

Contact Us

ETL listed products that are in doubt or for products that do not appear in the directory, please request a verification of certification.
Americas+1-888-347-5478 (or +1-847-660-7407)
Email etldirectory@intertek.com

Intertek Home
Product Directories
DLP on mobile devices

Inspector Center

Get up-to-date information on everything from our Accreditations to our Certifications and Marks. Learn more...

News

Intertek Unveils New Design for Product Safety and Quality Certification Marks. Learn more...

<- Back

© 2010 Intertek All Rights Reserved.
All other product or service names are the property of their respective owners.

UL Product iQ™

RRHS.E91049 - Receptacle-Plug Combination Accessories for Use in Hazardous Locations

Receptacle-Plug Combination Accessories for Use in Hazardous Locations

See General Information for Receptacle-Plug Combination Accessories for Use in Hazardous Locations

KILLARK, DIV OF HUBBELL INC (DELAWARE) E91049
2112 FENTON LOGISTICS PARK BLVD
FENTON, MO 63026 USA

Class I, Groups B, C and D; Class II, Groups F and G; Class III.

Receptacle Cat. No.	Rating	For Use With Receptacle Cat. No.	Rating
UGRX+-20231+++*	125VAC, 20A, 1HP, 60Hz	Killark Series UGP;	125VAC, 15A or 20A, 1HP, 60Hz
		Appleton Series ECP;	
		Crouse-Hinds Series ENP	
UGRFX+-20231*	125VAC, 20A, 1HP, 60Hz	Killark Series UGP;	125VAC, 15A or 20A, 1HP, 60Hz
		Appleton Series ECP;	
		Crouse-Hinds Series ENP	
UGRX+-20232+++*	250VAC, 20A, 2HP, 60Hz	Killark Series UGP;	125VAC, 15A or 20A, 2HP, 60Hz
		Appleton Series ECP;	
		Crouse-Hinds Series ENP	
UGRFX+-20232	250VAC, 20A, 2HP, 60Hz	Killark Series UGP;	125VAC, 15A or 20A, 2HP, 60Hz
		Appleton Series ECP;	
		Crouse-Hinds Series ENP	

Plug Cat. No.	Rating	For Use With Receptacle Cat. No.	Rating
UGP-15231+++	125VAC, 15A, 1HP, 60Hz	Killark Series UGR;	125VAC, 15A, 1 HP, 60Hz
		Appleton Series ENR;	
		Crouse-Hinds Series EFS	
UGP-20231+++	125VAC, 20A, 1HP, 60Hz	Killark Series UGR;	125VAC, 15A or 20A, 1 HP 60Hz

		Appleton Series ENR;	
		Crouse-Hinds Series EFS	
UGP-15232+++	250VAC, 15A, 2HP, 60Hz	Killark Series UGR;	250VAC, 15A, 2 HP, 60Hz
		Appleton Series ENR;	
		Crouse-Hinds Series EFS	
UGP-20232+++	250VAC, 20A, 2HP, 60Hz	Killark Series UGR;	250VAC, 15A or 20A, 2 HP, 60Hz
		Appleton Series ENR;	
		Crouse-Hinds Series EFS	

Plug Cat. No.	Rating
VP3275 or VP3022, VPN3275 or VPN3022**	250 V dc/600 V ac, 30 A
VP3375 or VP3033, VPN3375 or VPN3033**	250 V dc/600 V ac, 30 A
VP3385 or VP3023, VPN3385 or VPN3023**	250 V dc/600 V ac, 30 A
VP3475 or VP3044, VPN3475 or VPN3044**	250 V dc/600 V ac, 30 A
VP3485 or VP3034, VPN3485 or VPN3034**	250 V dc/600 V ac, 30 A
VP6275 or VP6022, VPN6275 or VPN6022**	250 V dc/600 V ac, 60 A
VP6375 or VP6033, VPN6375 or VPN6033**	250 V dc/600 V ac, 60 A
VP6385 or VP6023, VPN6385 or VPN6023**	250 V dc/600 V ac, 60 A
VP6475 or VP6044, VPN6475 or VPN6044**	250 V dc/600 V ac, 60 A
VP6485 or VP6034, VPN6485 or VPN6034**	250 V dc/600 V ac, 60 A
VP10277 or VP1022, VPN10277 or VPN1022**	250 V dc/600 V ac, 100 A
VP10377 or VP1033, VPN10377 or VPN1033**	250 V dc/600 V ac, 100 A
VP10387 or VP1023, VPN10387 or VPN1023**	250 V dc/600 V ac, 100 A
VP10477 or VP1044, VPN10477 or VPN1044**	250 V dc/600 V ac, 100 A
VP10487 or VP1034, VPN10487 or VPN1034**	250 V dc/600 V ac, 100 A

Receptacle Cat. No.	Rating	For Use With Plug Cat. No.	Rating
VSQ3023++,#	600VAC, 30A, 60 HZ	APJ3385	600VAC, 30A, 60 HZ
		NPJ3383	600VAC, 30A, 60 HZ
		NPJ3384	600VAC, 30A, 60 HZ
		ACP3023BC	600VAC, 30A, 60 HZ

VSQ3034#	600VAC, 30A, 60 HZ	APJ3485	600VAC, 30A, 60 HZ
		NPJ3483	600VAC, 30A, 60 HZ
		NPJ3484	600VAC, 30A, 60 HZ
		ACP3034BC	600VAC, 30A, 60 HZ

Class I, Division 2, Groups B, C and D.

Receptacle Cat. No.	Rating	For Use With Plug Cat. No.	Rating
UGRA-20231	125VAC, 20A, 1HP 60Hz	Killark Series UGP;	125VAC, 15A or 20A, 1HP, 60Hz
		Appleton Series ECP;	
		Crouse-Hinds Series ENP	
UGRA-20232	250VAC, 20A, 2HP, 60Hz	Killark Series UGP;	125VAC, 15A or 20A, 2HP, 60Hz
		Appleton Series ECP;	
		Crouse-Hinds Series ENP	

+X may be any number 1 thru 12 when X is 1 thru 6, it may be preceded by the letter "B" indicating also for use in Class I, Group B locations.

++May be followed by suffix FS indicating factory sealed.

+++Maybe followed by suffix "QW" for Quick Wiring Option.

*Cat. No. may be followed by suffix "R" to designate rain tight, except for receptacles marked for use in Class I, Group B locations.

**May be followed by suffix -S37, may be followed by -AT, may be followed by -MN.

#May be followed by suffix S37 indicating the electrical components are rotated 22-1/2° to allow a change in polarity from the standard pin configuration.

Last Updated on 2015-09-08

The appearance of a company's name or product in this database does not in itself assure that products so identified have been manufactured under UL's Follow-Up Service. Only those products bearing the UL Mark should be considered to be Certified and covered under UL's Follow-Up Service. Always look for the Mark on the product.

UL permits the reproduction of the material contained in the Online Certification Directory subject to the following conditions: 1. The Guide Information, Assemblies, Constructions, Designs, Systems, and/or Certifications (files) must be presented in their entirety and in a non-misleading manner, without any manipulation of the data (or drawings). 2. The statement "Reprinted from the Online Certifications Directory with permission from UL" must appear adjacent to the extracted material. In addition, the reprinted material must include a copyright notice in the following format: "© 2020 UL LLC"

UL Product iQ™

RRHS.E32416 - Receptacle-Plug Combination Accessories for Use in Hazardous Locations

Receptacle-Plug Combination Accessories for Use in Hazardous Locations

See General Information for Receptacle-Plug Combination Accessories for Use in Hazardous Locations

HUBBELL INC WIRING DEVICE DIV E32416
40 WATERVIEW DR
SHELTON, CT 06484-4300 USA

Class I, Groups B, C and D; Class II, Groups F and G, Class III.

Plug Cat. No.	Rating
HBL330PS1W, M330PS1W	250VDC, 600VAC, 30A
HBL330PS2W, M430PS1W	250VDC, 600VAC, 30A
HBL430PS1W, M530PS1W	250VDC, 600VAC, 30A
HBL430PS2W, M330PS2W	250VDC, 600VAC, 30A
HBL530PS1W, M430PS2W	250VDC, 600VAC, 30A
HBL360PS1W, M360PS1W	250VDC, 600VAC, 60A
HBL360PS2W, M360PS2W	250VDC, 600VAC, 60A
HBL460PS1W, M460PS1W	250VDC, 600VAC, 60A
HBL460PS2W, M460PS2W	250VDC, 600VAC, 60A
HBL560PS1W, M560PS1W	250VDC, 600VAC, 60A
HBL3100PS1W, M3100PS1W	250VDC, 600VAC, 100A
HBL3100PS2W, M3100PS2W	250VDC, 600VAC, 100A
HBL4100PS1W, M4100PS1W	250VDC, 600VAC, 100A
HBL4100PS2W, M4100PS2W	250VDC, 600VAC, 100A
HBL5100PS1W, M5100PS1W	250VDC, 600VAC, 100A
UGP-15231	125VAC, 15A, 1 hp
UGP-20231	125VAC, 20A, 1 hp
UGP-15232	250VAC, 15A, 2 hp

UGP-20232	250VAC, 20A, 2 hp

Class I, Division 2, Groups B, C and D.

Receptacle Cat. No.	Rating
UGRA-20231*	125VAC, 20A, 1 hp
UGRA-20232*	250VAC, 20A, 2 hp

*With or without additional suffixes for commercial variations (Packaging, color, etc.).

Last Updated on 1993-12-04

The appearance of a company's name or product in this database does not in itself assure that products so identified have been manufactured under UL's Follow-Up Service. Only those products bearing the UL Mark should be considered to be Certified and covered under UL's Follow-Up Service. Always look for the Mark on the product.

UL permits the reproduction of the material contained in the Online Certification Directory subject to the following conditions: 1. The Guide Information, Assemblies, Constructions, Designs, Systems, and/or Certifications (files) must be presented in their entirety and in a non-misleading manner, without any manipulation of the data (or drawings). 2. The statement "Reprinted from the Online Certifications Directory with permission from UL" must appear adjacent to the extracted material. In addition, the reprinted material must include a copyright notice in the following format: "© 2020 UL LLC"

intertek
Total Quality. Assured.

<- Back

Product Description

Title: ELECTRIC LIGHTING FIXTURES FOR USE IN HAZARDOUS (CLASSIFIED) LOCATIONS

Company: LARSON ELECTRONICS LLC - Kemp, TX USA

Product Information: Trade Name(s): Magna Light.

LED Flood Light, Model Nos. EPLC2-HB-150LED-RT, EPLC2-LED-150W-RT, EPLC2-WPLED-150W-RT, EPLC2-HB-150LED-RT-48, EPLC2-HB-100LED-RT, EPLC2-HB-100LED-RT-UVA, EPL-HB-150LED-RT, EP-LED-150W-RT, EPL-WPLED-150W-RT, EPL-HB-150LED-RT-48, EPL-HB-100LED-RT, EPL-HB-100LED-RT-UVA, AL-12-IPS-LED-1224DC, HAL-24-IPS-LED-1224DC, HAL-36-IPS-LED-1224DC, HAL-48-IPS-LED-1224DC; followed by -UVA, -UVB, -UVC, -IR, -C, -VISUV, -VISIR, -VISRED, -VISBLU, -VISGRN, -VISAMB, -27K, -30K, -40K, -45K, -50K, -55K, -56K, -60K, -65K, -DAYLIGHT, -750NM, -770NM, -850NM, -940NM, -1550NM, -RED, -BLU, -GRN, -AMB, or -PRPL.

LED Fixed Lighting suitable for used in Class I, Division 1, Groups C, D. Class I, Division 2, Groups A, B, C & D, T6, -25°C to +40°C., Model Nos. EPL-LP-12-LED-SFC, EPL-LP-24-LED-SFC, EPL-LP-48-LED-SFC.LED Fixed Lighting suitable for used in Class I Division 1 Group B C and D, Class I Division 2 Group A B C and D, Class II Division 1 Group E F and G, Class II Division 2 Group F and G and Class III hazardous locations, T6, -25°C to +40°C., Model Nos. EPL-HB-100LED-RT, EPL-HB-150LED-RT, EPL-HB-200LED-RT, EPL-HB-240LED-RT, EPL-HB-300LED-RT.

LED Light, Model Nos. HAL-7W-LED-XX-Y-ZZZ, HAL-XX-YYY-LED-XX-T-ZZZZ, HAL-31L-LV-XX-Y-ZZZZ, HAL-60W-HV-XX-Y-ZZZZ.

LED Luminaire for use in Class I, Division 1&2, Groups C&D, T5 Hazardous Location, Model Nos. EPL-HB-50LED-RT; followed by -CM, -STNCH, -PT, -WM or -CLG; followed by -1227 or -1224; followed by -60DB, -100DB or -140DB; followed by -30K, -40K or -50K. EPL-HB-50LED-RT; followed by -CM, -STNCH, -PT, -WM, -CLG; followed by -1347 or -347V; followed by -60DB, -100DB or -140DB; followed by -30K, -40K or -50K. EPL-HB-50LED-RT; followed by -CM, -STNCH, -PT, -WM, -CLG; followed by -3480 or -480V; followed by -60DB, -100DB or -140DB; followed by -30K, -40K or -50K.

Luminaires, Model Nos. HAL-48-1L-LED-BMSW, HAL-48-2L-LED-BMSW, HAL-48-3L-LED-BMSW, HAL-24-1L-LED-BMSW, HAL-24-2L-LED-BMSW, HAL-24-3L-LED-BMSW. For use in Hazardous Locations, Class I, Division 2, Groups A, B, C and D; T3C, T4A or T5 -20°C < Tamb < 40°C.

Luminaires, Model Nos. EPL-48-2L-LED-SFC, EPL-24-2L-LED-SFC. for use in Hazardous Locations: Class I, Div. 1, Groups C and D T5 or T6 -20°C < Tamb < 40°C Class II, Div. 1., Groups E, F, and G; Class III Div.1 T3B -20°C < Tamb < 40°C

Contact Us
ETL listed products that are in doubt or for products that do not appear in the directory, please request a verification of certification.
Americas+1-888-347-5478 (or +1-847-660-7407)
Email etldirectory@intertek.com

Intertek Home
Product Directories
DLP on mobile devices

Inspector Center
Get up-to-date information on everything from our Accreditations to our Certifications and Marks. Learn more...

News
Intertek Unveils New Design for Product Safety and Quality Certification Marks. Learn more...

Evaluated to the following:	A representative sample of the listed devices have been tested, investigated and found to comply with the requirements of the Standard(s) for Electric Lighting Fixtures for Use in Hazardous (Classified) Locations (UL-844) and are identified with the ETL Listed Mark.

<- Back

© 2010 Intertek All Rights Reserved.
All other product or service names are the property of their respective owners.

intertek
Total Quality. Assured.

<- Back

Product Description

Title: LUMINAIRES

Company: LARSON ELECTRONICS LLC - Kemp, TX USA

Product Information: Trade Name(s): Magna Light.

Fixed Luminaires, Model Nos. EPL-HB-100LED-RT, EPL-HB-150LED-RT, EPL-HB-200LED-RT, EPL-HB-240LED-RT, EPL-HB-300LED-RT, EPL-EMG-LB-100LED-RT, EPL-EMG-LB-150LED-RT, EPL-EMG-LB-200LED-RT.

LED Flood Light, Model Nos. EPLC2-HB-150LED-RT, EPLC2-LED-150W-RT, EPLC2-WPLED-150W-RT, EPLC2-HB-150LED-RT-48, EPLC2-HB-100LED-RT, EPLC2-HB-100LED-RT-UVA, EPL-HB-150LED-RT, EPL-LED-150W-RT,
EPL-WPLED-150W-RT, EPL-HB-150LED-RT-48, EPL-HB-100LED-RT, EPL-HB-100LED-RT-UVA.

LED Light, Model Nos. HAL-7W-LED-XX-Y-ZZZ, HAL-XX-YYY-LED-XX-T-ZZZZ, HAL-31L-LV-XX-Y-ZZZZ, HAL-60W-HV-XX-Y-ZZZZ.

Luminaires, Model Nos. EPL-48-2L-LED-SFC, EPL-24-2L-LED-SFC. for use in Hazardous Locations: Class I, Div. 1, Groups C and D T5 or T6 -20°C < Tamb < 40°C Class II, Div. 1., Groups E, F, and G; Class III Div.1 T3B -20°C < Tamb < 40°C

Surface-mounted Luminaire, Model Nos. EPL-LP-12-LED-SFC, EPL-LP-12-LED-SFC, EPL-LP-12-LED-SFC, EPL-LP-12-LED-SFC, EPL-LP-24-LED-SFC, EPL-LP-24-LED-SFC, EPL-LP-24-LED-SFC, EPL-LP-24-LED-SFC, EPL-LP-48-LED-SFC, EPL-LP-48-LED-SFC, EPL-LP-48-LED-SFC, EPL-LP-48-LED-SFC.

Wall mounted luminaire, Model Nos. EPL-HB-50LED-RT; followed by -CM, -STNCH, -PT, -WM or -CLG; followed by -1227 or -1224; followed by -60DB, -100DB or -140DB; followed by -30K, -40K or -50K. EPL-HB-50LED-RT; followed by -CM, -STNCH, -PT, -WM or -CLG; followed by -1347 or -347V; followed by -60DB, -100DB or -140DB; followed by -30K, -40K or -50K. EPL-HB-50LED-RT; followed by -CM, -STNCH, -PT, -WM or -CLG; followed by -3480 or -480V; followed by -60DB, -100DB or -140DB; followed by -30K, -40K or -50K.

Evaluated to the following: A representative sample of the listed devices have been tested, investigated and found to comply with the requirements of the Standard(s) for Luminaires (CAN/CSA-C22.2 No. 250.0) and are identified with the cETL Listed Mark.; A representative sample of the listed devices have been tested, investigated and found to comply with the requirements of the Standard(s) for Luminaires (CAN/CSA-C22.2 No. 250.0) and are identified with the cETL Listed Mark.

Contact Us

ETL listed products that are in doubt or for products that do not appear in the directory, please request a verification of certification.
Americas+1-888-347-5478 (or +1-847-660-7407)
Email etldirectory@intertek.com

Intertek Home
Product Directories
DLP on mobile devices

Inspector Center

Get up-to-date information on everything from our Accreditations to our Certifications and Marks. Learn more...

News

Intertek Unveils New Design for Product Safety and Quality Certification Marks. Learn more...

<- Back

© 2010 Intertek All Rights Reserved.
All other product or service names are the property of their respective owners.

Certification Record

Contact an Expert (https://www.csagroup.org/contact/)

CUSTOMER	CLASS	FILE NUMBER
Killark, Div of Hubbell Inc. (Delaware) 3940 Dr. Martin Luther King Dr., St. Louis MO USA 63113	6238-03 (../class ass=62 RECEPTACLES-Attachment Plug Type and Plugs - With Switch - For Hazardous	014667_C_000

Contact an Expert (https://www.csagroup.org/contact/)

Class I, Div. 1, Groups B, C, and D; Class II, Div. 1, Groups F and G; Class III:

- Receptacles with Plugs interlocked with switches, Cat. No. VSQ3023; rated 600 V max, 30 A max, 3-wire, 2-pole. For use with Killarks' Plug VP3385, VP3023 or Crouse-Hinds APJ3385, NPJ3383, NPJ3384; Appleton ACP3023BC.
- Receptacles with Plugs interlocked with switches, Cat. No. VSQ3034; rated 600 V max, 30 A max, 4-wire, 3-pole. For use with Killarks' Plug VP3485, VP3034 or Crouse-Hinds APJ3485, NPJ3483, NPJ3484; Appleton ACP3034BC.

Note: Cat. Nos. VSQ3023 and VSQ3034, may be followed by suffix letters FS, may be followed by S37

- Receptacles with plugs interlocked with switches, Cat No VSQ3023, may be followed by FS, may be followed by S37, rated 30A max. 600V ac max. 3-wire, 2-pole. For use with Killark plugs VP3385, VP3023-S37 or Crouse-Hinds plugs APJ3385, NP3383, NP0J3384 or Appleton plugs ACP3023BC.
- Receptacles with plugs interlocked with switches, Cat No VSQ3034, may be followed by FS, may be followed by S37, rated 30A max, 600V ac ,ax. 3-wire, 2-pole. For use with Killark plugs VP3385, VP3034-S37 or Crouse-Hinds plugs APJ3385, NP3383, NP0J3384 or Appleton plugs ACP3023BC.
- Receptacles with plugs interlocked with switches, Cat. No. VSQ6023; rated 600 V max, 60A max, 3-wire, 2-pole. For use with Killarks' Plug VP6385, VP6023 or Crouse Hinds plugs APJ6385, NPJ6383, NPJ6384, and Appleton's' plug ACP6023BC.
- Receptacles with plugs interlocked with switches, Cat. No. VSQ6034; rated 600 V max, 60A max, 4-wire, 3-pole. For use with Killarks' Plug VP6485, VP6034 or Crouse Hinds plugs APJ6485, NPJ6483, NPJ6484, and Appleton plug ACP6034BC
- Receptacles with Plugs interlocked, Cat. No. VSQ6023-S37; rated 600 V ac max 60 A max 3-wire 2-pole. For use with Killarks' plug VP6385-S37, VP6023-S37 or Crouse Hinds plugs

We're always here to help. Let's talk.

We're here to answer your questions and help you get started right away. Call or send us a message anytime.

Contact Us (https://www.csagroup.org/contact)

Contact an Expert (https://www.csagroup.org/contact/)

(https://www.csagroup.org/)

Testing & Certification Standards About

Careers Store Contact English

© 2020 CSA Group
(https://www.csagroup.org)

Legal (https://www.csagroup.org/legal/)

Privacy Policy (https://www.csagroup.org/legal/privacy-policy/)

Evidence of Insurance (https://www.csagroup.org/evidence-of-insurance/)

HSSE Policy (https://www.csagroup.org/hsse-policy/)

Accreditation (https://www.csagroup.org/accreditation/)

Accessibility (https://www.csagroup.org/accessibility/)

Annual Report (https://www.csagroup.org/annual-report/)

Contact an Expert (https://www.csagroup.org/contact/)

Certification

Manufacturer: Larson Electronics LLC
Address: 9419 US-HWY 175
Kemp, Texas 75143

Declare the following equipment conforms to the standard(s) as listed:

Model: EPL-XX-150RT, EPL-XX-150LED Series
Description: Explosion Proof Portable LED Light

Evaluated Listings:

CE: DIRECTIVE 2014/35/EU - LOW VOLTAGE DIRECTIVE
CE: DIRECTIVE 2014/30/EU - EMC DIRECTIVE
CE: Regulation (EC) No 1907/2006 - REACH REGULATION
CE: DIRECTIVE 2015/863/EU - ROHS DIRECTIVE

The EPL-XX-150RT, EPL-XX-150LED Series complies with the essential protection requirements of the European Parliament of the Council Directive for Low Voltage Directive, EMC Directive, REACH Regulation, and RoHS Directive. This certification applies to all specimens manufactured in accordance to the manufacture's drawings.

Signed for and on behalf of: Larson Electronics, LLC
Place of issue: Kemp, TX

Signature: James Thomas

Name: James Thomas
Position: Operations Manager

LARSON ELECTRONICS LLC • 9419 E US HWY 175 • KEMP, TX 75143
p: 1-800-369-6671 • intl: 903-498-3363 • f: 903-498-3364 • sales@larsonelectronics.com

Certification

Manufacturer: Larson Electronics LLC
Address: 9419 US-HWY 175
Kemp, Texas 75143

Declare the following equipment conforms to the standard(s) as listed:

Model: EPL-XX-150RT, EPL-XX-150LED Series
Description: Explosion Proof Portable LED Light

Evaluated Listings:

CE: DIRECTIVE 2015/863/EU - ROHS DIRECTIVE

This is to certify that products offered by Larson Electronics LLC comply with the Reduction of Hazardous Substances (RoHS) directives. Directive 2002/95/EC became effective on 1 July 2006. It restricts the use of six substances in the manufacture of electrical and electronic equipment. This directive was revised in June 2011 and is now referred to as directive 2011/65/EU. Directive 2015/863/EU amending Annex II to Directive 2011/65/EU announced plans to add four substances from 22 July 2019.

We hereby certify that the equipment specified above conforms to the Directive(s) by containing less of the restricted substances than the stated limits.

Signed for and on behalf of: Larson Electronics, LLC
Place of issue: Kemp, TX

Signature: James Thomas

Name: James Thomas
Position: Operations Manager

LARSON ELECTRONICS LLC • 9419 E US HWY 175 • KEMP, TX 75143
p: 1-800-369-6671 • intl: 903-498-3363 • f: 903-498-3364 • sales@larsonelectronics.com

Certification

Manufacturer: Larson Electronics LLC
Address: 9419 US-HWY 175
Kemp, Texas 75143

Declare the following equipment conforms to the standard(s) as listed:

Model: EPL-XX-150RT, EPL-XX-150LED Series
Description: Explosion Proof Portable LED Light

Evaluated Listings:

CE: Regulation (EC) No 1907/2006 - REACH REGULATION

This letter establishes the opinion of Larson Electronics LLC regarding the status, under the current European Union ("EU") Regulations on Registration, Evaluation, Authorization, and Restriction of Chemical Substances ("REACH").

REACH does not apply to manufactured products which are referred to as "completed articles". Substances (chemicals) are subject to REACH registration, NOT products.

In addition, Articles are exempt from the REACH requirements if (a) the Article does not contain a substance of very high concern or candidate substance in an amount exceeding 0.1% weight by weight, and (b) if substances present in the Article in excess of 1 ton per year per importer are not expected nor intended to be released.

Based on communication with our raw material suppliers, we conclude that to the best of our knowledge our products requiring REACH compliance do not contain any of the currently listed SVHC in concentrations of 0.1% or above.

Accordingly, we foresee no registration or pre-registration requirement for the products we supply.

Signed for and on behalf of: Larson Electronics, LLC
Place of issue: Kemp, TX

Signature: James Thomas

Name: James Thomas
Position: Operations Manager

LARSON ELECTRONICS LLC • 9419 E US HWY 175 • KEMP, TX 75143
p: 1-800-369-6671 • intl: 903-498-3363 • f: 903-498-3364 • sales@larsonelectronics.com

Frequently Asked Questions (FAQ)