Larson Electronics LLC
9419 E US HWY 175, Kemp, TX 75143
Phone: 800.369.6671

www.LarsonElectronics.com
Email: sales@LarsonElectronics.com
Fax: 903.498.3364

EPL-EMG-48-2L-T8

Explosion Proof Emergency Fluorescent Light Combination - 4 foot - 2 T8 lamps - Class I, Div I

Product ID: 48472



Larson Electronics LLC manufactures a wide variety of products, including custom built to spec designs. The pictures displayed for this unit are a general representation of form factor for the product line and may not accurately represent this exact configuration in every detail due to custom builds and changes between similar products in our standard catalog. The specifics for this configuration are listed in the specification table and supporting documentation (CAD files, Dimensional Drawing, Name Plate Diagram, Wiring Diagram, etc.). This means that specific details (receptacles, plugs, wires, connections, mounting brackets, external finishes, etc.) may not be accurately represented in images vs specifications. Please review specifications and do not order based solely on images.

EPL-EMG-48-2L-T8 Explosion Proof
NRTL Listed for United States & Canada

Dimensions: W-11.25" L-52" H-8.5 "

Weight: 65 Lbs

Voltage: Multi- 120V-60hz 220V-50hz 240V-60hz 277V-60hz
Total Watts: 64 watts

Total Lumens: F32-T8/841 Bulbs 5,900

Color Temp: 4100K

Beam Angle: N/A
Lamp Life Expectancy: F32-T8/841 Bulbs 30,000 Hours
Luminous Efficacy: F32-T8/841 Bulbs92.18 Lm/W
Ambient Operating Temp Range -30° C to 70° C
Operating Temp Range: T6 Rated

Minimum Operating Temp: -30° C

Maximum Case Temp: 90° C

Mounting: Bracket Standard - Pendant Optional

Wiring Hub: 1/2 inch threaded

Ratings
Class 1 Division 1, Groups C and D
Class 1 Division 2, Group A,B,C,D
NRTL Certified to UL 595 Outdoor Marine Type (Saltwater)
NRTL Certified to UL 844, 924
NRTL Certified to UL 1598 Marine Type
Class II Division 1- 2, Groups E,F,G
Certified Canadian Standards
Listed for Paint Spray Booths*
Switch Leg for Powering Light On/Off

Special Orders - Special Requirements
Contact us for special requirements

Toll Free: 1-800-369-6671

Intl: 1-903-270-1187

Fax: 1-903-498-3364

E-mail: sales@larsonelectronics.com

Made in the USA

The Larson Electronics EPL-EMG-48-2L-T8 Explosion Proof Emergency Lights & Fluorescent light Combination is NRTL Listed for United States and Canada Class 1 Division 1, Class 1 Division 2 and ideal for hazardous locations where flammable chemical/petrochemical vapors exist or have the potential to exist.

Larson Electronics LLC
9419 E US HWY 175, Kemp, TX 75143
Phone: 800.369.6671

www.LarsonElectronics.com
Email: sales@LarsonElectronics.com
Fax: 903.498.3364

The EPL-EMG-48-2L-T8 is a 4 foot long, 2 lamp, Class 1 Division 1 and Class 2 Division 1and 2 explosion proof fluorescent light which is equipped with an added battery backup providing 90 minutes of emergency runtime. This T6 temperature rated fixture comes standard with two T8 fluorescent lamps which produce a combined 5,500 lumens of light. This fixture is multi-voltage capable and provides operators in hazardous locations with a reliable and durable lighting solution that provides explosion proof protection along with the security of an emergency battery backup.

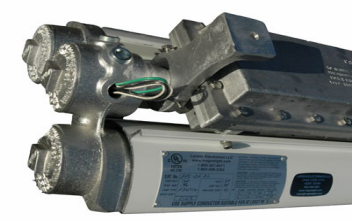

Click Photo to Enlarge



Click Photo to Enlarge



Click Photo to Enlarge

This fluorescent light works, mounts and is wired like our EPL-48-2L explosion proof fluorescent light fixtures. The main difference is that we attach an extra Bodine ballast box to the unit that adds emergency light functionality to the fixture. This explosion proof emergency light will run the standard 90 minutes after power is lost. The light recharges the battery once electrical power is restored. Standard configuration includes a single emergency ballast that will run a single lamp at 2750 lumens for 90 minutes. For an additional charge, a second ballast can be added to run a second lamp for 5500 total lumens output for 90 minutes. The battery backup unit includes a switched leg for turning the light fixture on/off without kicking the unit into emergency mode.
NOTE ON LAMPS: This unit comes equipped with an electronic ballast and F32-T8/841 bulbs which produce 2750 lumens per bulb and have a rated lifespan of 24,000 hours.
Additional mounting options: Unless otherwise specified, our standard, most popular configuration is the bracket end mounting shown in the photos above. We also offer a pendant mount for those needing to suspend the fixture away from the ceiling surface (i.e. suspend from pipe or conduit).
Standard Bracket Mounts: Each bracket is cinched to the bracket mounting peg on each side of the light. The angle of the bracket is set by tightening two cap screws on either side of the bracket. The cap screws act as a set screw. The bracket itself is mounted via a single bolt hole at the top the bracket. There are two brackets, one on each end of the light. Once the brackets are mounted to a surface (ceiling, floor or wall), the light fixture can be removed from the brackets by loosening the cap screws that hold the bracket to the mounting peg. The first picture shown above illustrates the ballast side bracket and also shows the access caps for changing the bulbs. The second picture shows the bracket at the opposite end of the fluorescent light.

Made in USA Quality

1. Each unit dielectrically tested.
2. Fixture arrives assembled and lamped to reduce installation time and cost. Adjustable mounting brackets enable the operator to choose any mounting angle for the fixture, where other models may only offer one or three choices.
3. Fixture constructed of extruded corrosion resistant copper free aluminum alloy.
4. Over-sized, finned ballast housing for 800 mA fixtures provides more heat dissipation and extends ballast life. Larger ballast box accommodates High Output lamp

Lamps

F32-T8/841 – 32 watt, 2750 lumens per bulb, 30,000 hours life, 4100 Kelvin color (Suffix –T8)

ballasts. Ballast housing easily accessible and externally mounted. Top and bottom covers secured with nuts and bolts, instead of threaded through holes, which can be damaged with dirt.
5. Heavy gauge extruded aluminum reflectors with high gloss reflective finish. Resists dents and corrosion.
6. A wrench is used to unscrew the end caps for relamping the fixture, while other models require the “tap and knock off” method to loosen the end cap.
7. Explosion proof, impact and heat resistant Pyrex tubes provide lamp protection.

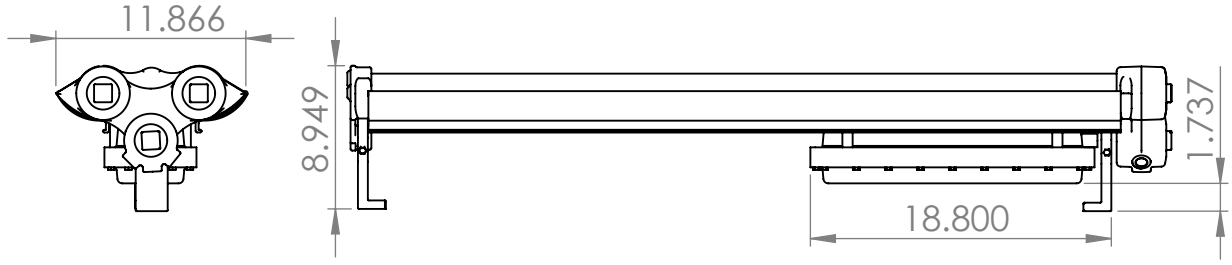
11.866
8.949
1.737
18.800

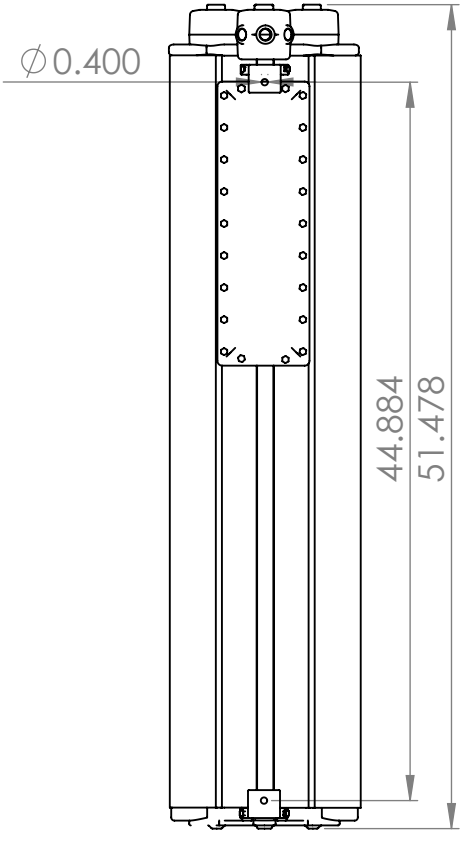
∅0.400
44.884
51.478

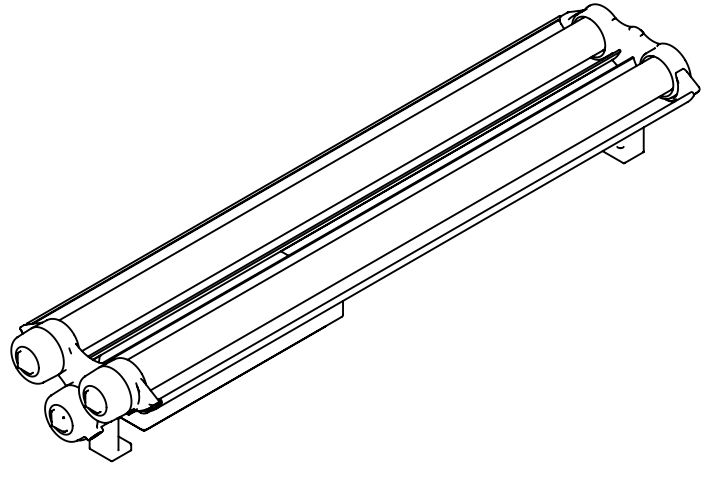

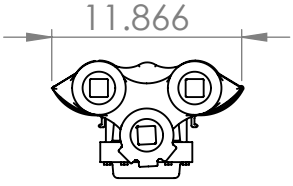
11.866

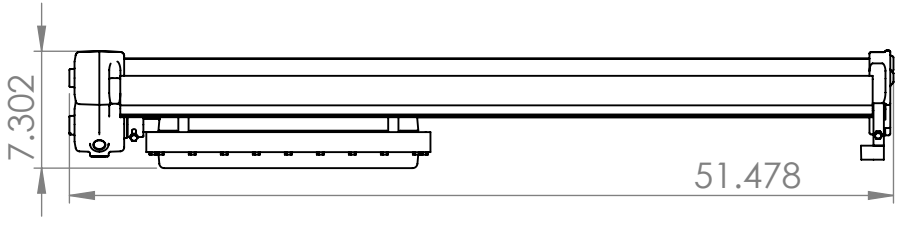
7.302
51.478

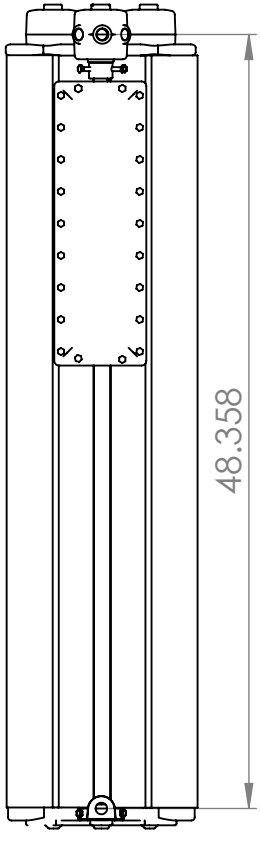
48.358

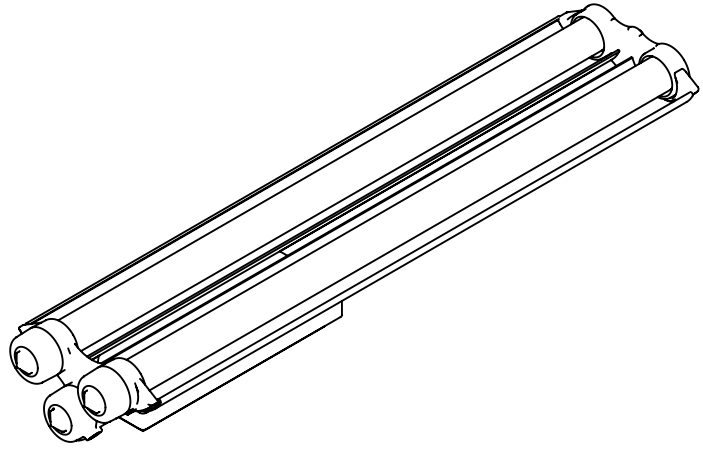


ELECTRONICS



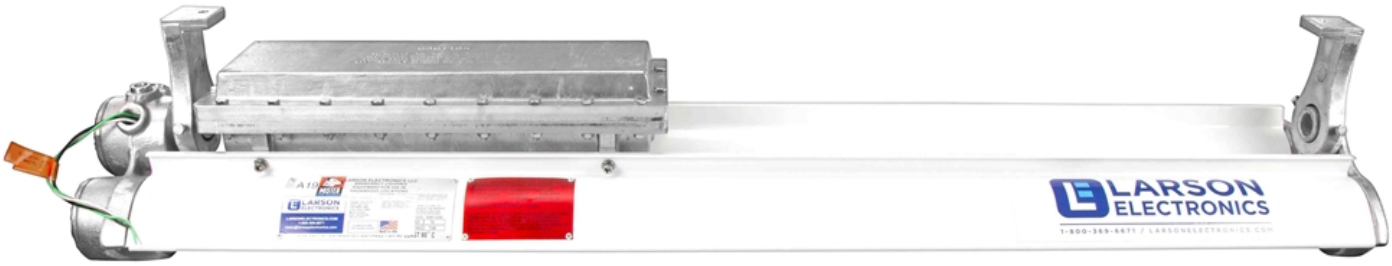
LARSON
ELECTRONICS

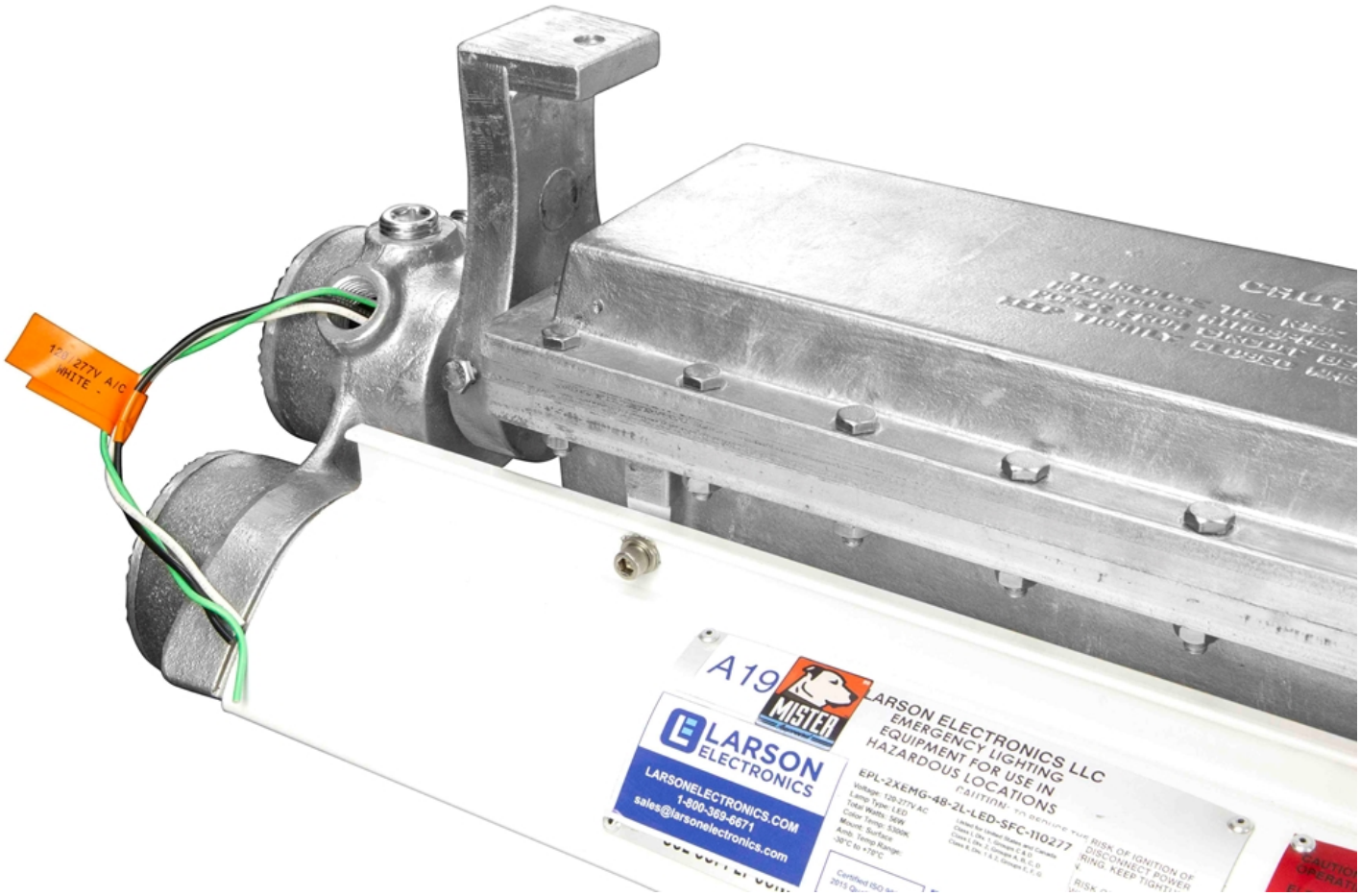
A19
MISTER
LARSON ELECTRONICS
LARSONELECTRONICS.COM
1-800-369-6671
sales@larsonelectronics.com
LARSON ELECTRONICS LLC
EMERGENCY LIGHTING
EQUIPMENT FOR USE IN
HAZARDOUS LOCATIONS
EPL-2XEMG-48-2L-LED-SFC-110277

Material Safety Data Sheet

To Whom It May Concern,

The external housing and ballast contained within Larson Electronics LLC EPL, EPLC2, FTL, GAU, GVP, HAL, HALP, HALD, HAL-LI, HALS, HALSS, IND, and WAL industrial line of fluorescent lights with emergency backup for hazardous locations are considered "ARTICLES" under 29 CFR 1910-1200, the OSHA Hazard Communication Standard, and do not require a Material Safety Data Sheet (MSDS). This document does not expire.

Articles are specifically exempt from the regulations of this standard. OSHA defines an article as follows:

1910-1200(c) – Article means a manufactured item other than a fluid or particle:

i. Which is formed to a specific shape or design during manufacture;
ii. Which has end use function(s) dependent in whole or in part upon its shape or design during end use; and
iii. Which under normal conditions does not release more than very small quantities.

The "hazardous location" and "explosion proof" are terminology for the environment where these products will be installed. This is not to be confused with "hazardous materials;" this product does not contain any hazardous materials.

The fluorescent lamp and battery for the emergency operation function installed within the light fixture requires a Material Safety Data Sheet (MSDS). The MSDS for EMG battery and fluorescent lamps are contained in the following pages. Specific MSDS depends on lamp ordered.

Regards,

Ray Smith
Larson Electronics, LLC.

LARSON ELECTRONICS LLC • 9419 E US HWY 175 • KEMP, TX 75143
p: 1-800-369-6671 • intl: 903-498-3363 • f: 903-498-3364 • sales@larsonelectronics.com

SAFETY DATA SHEET

HCS-2012 APPENDIX D TO §1910.1200

Version 1 **Issue Date** 21-Jan-2015
Product Name Nickel Cadmium Battery **Revision date** 21-Jan-2015

1. IDENTIFICATION OF THE SUBSTANCE/MIXTURE AND OF THE COMPANY/UNDERTAKING

Product identifier

Product Name	Nickel Cadmium Battery
Chemical Name	Nickel Cadmium Battery

Other means of identification

Recommended use of the chemical and restrictions on use

Recommended Use	Used in electric tools
Uses advised against	No information available

Details of the supplier of the safety data sheet

Supplier	Jiangsu Highstar Battery Manufacturing Co.,Ltd.
Address	No.306 Heping Road(s), Qidong City, Jiangsu, China
Postal Code	226200
Phone	0086-513-80795666
FAX	0086-513-83312306
E-mail	chenj@highstar.net.cn

Emergency telephone number

0086-513-80795666

2. HAZARDS IDENTIFICATION

GHS Classification

Not a dangerous substance or mixture according to the Globally Harmonized System (GHS)

Label elements

Symbols/Pictograms	None
Signal word	None
Hazard Statements	None
Precautionary Statements	
Prevention	None
Response	None
Storage	None
Disposal	None

Hazards not otherwise classified (HNOC)

No information available

Unknown acute toxicity

.?% of the mixture consists of ingredient(s) of unknown toxicity

3. COMPOSITION/INFORMATION ON INGREDIENTS

Chemical nature Mixture

Chemical Name	CAS No	Weight-%
Nickel	7440-02-0	10 - 25
Cadmium and compounds (as Cd)	7440-43-9	10 - 25
Cadmium hydroxide (Cd(OH)2)	21041-95-2	12 - 23
Nickel hydroxide	12054-48-7	6 - 14

CENTRE TESTING INTERNATIONAL CORPORATION
Build C,Hongwei Industrial Zone,Baoan 70 District,Shenzhen China
www.cti-cert.com E-mail:info@cti-cert.com
Hotline 400-6788-333

Iron	7439-89-6	10 - 13

4. FIRST AID MEASURES

Description of first aid measures

General advice	Remove contaminated clothing and shoes. If symptoms persist, call a physician.
Inhalation	Not an expected route of exposure. IF INHALED: Remove victim to fresh air and keep at rest in a position comfortable for breathing.
Skin Contact	Wash hands thoroughly after handling. .
Eye contact	Not an expected route of exposure. .
Ingestion	Rinse mouth Get medical attention Never give anything by mouth to an unconscious person

Most important symptoms and effects, both acute and delayed

No information available.

Indication of any immediate medical attention and special treatment needed

Treat symptomatically.

5. FIRE-FIGHTING MEASURES

Extinguishing media

Suitable extinguishing media	Use extinguishing measures that are appropriate to local circumstances and the surrounding environment.
Unsuitable extinguishing media	No information available.

Specific hazards arising from the chemical

Thermal decomposition can lead to release of irritating and toxic gases and vapors

Protective equipment and precautions for firefighters

As in any fire, wear self-contained breathing apparatus pressure-demand, MSHA/NIOSH (approved or equivalent) and full protective gear.

6. ACCIDENTAL RELEASE MEASURES

Personal precautions, protective equipment and emergency procedures

Evacuate personnel to safe areas
Ensure adequate ventilation, especially in confined areas
Remove all sources of ignition
Use personal protection recommended in Section 8

Methods and material for containment and cleaning up

Prevent further leakage or spillage if safe to do so
Pick up and transfer to properly labeled containers

Avoid release to the environment

7. HANDLING AND STORAGE

Precautions for safe handling

Handle in accordance with good industrial hygiene and safety practice
Ensure adequate ventilation, especially in confined areas
Avoid creating dust
Avoid contact with eyes
Wash thoroughly after handling
Use personal protection recommended in Section 8

CENTRE TESTING INTERNATIONAL CORPORATION
Build C,Hongwei Industrial Zone,Baoan 70 District,Shenzhen China
www.cti-cert.com E-mail:info@cti-cert.com
Hotline 400-6788-333

Conditions for safe storage, including any incompatibilities

Keep containers tightly closed in a dry, cool and well-ventilated place
Keep away from heat

8. EXPOSURE CONTROLS/PERSONAL PROTECTION

Control parameters

Chemical Name	ACGIH TLV	OSHA PEL	NIOSH IDLH	Denmark	European Union
Nickel (CAS #: 7440-02-0)	TWA: 1.5 mg/m^3 inhalable fraction	TWA: 1 mg/m^3 (vacated) TWA: 1 mg/m^3	IDLH: 10 mg/m^3 IDLH: 10 mg/m^3 Ni TWA: 0.015 mg/m^3 TWA: 0.015 mg/m^3 except Nickel carbonyl Ni	TWA: 0.05 mg/m^3	-
Cadmium and compounds (as Cd) (CAS #: 7440-43-9)	TWA: 0.01 mg/m^3 TWA: 0.002 mg/m^3 respirable fraction TWA: 0.01 mg/m^3 Cd TWA: 0.002 mg/m^3 Cd respirable fraction	TWA: 0.1 mg/m^3 fume applies to any operations or sectors for which the Cadmium standard is stayed or otherwise not in effect TWA: 0.2 mg/m^3 dust applies to any operations or sectors for which the Cadmium standard is stayed or otherwise not in effect TWA: 5 µg/m^3 (vacated) STEL: 0.3 ppm fume Ceiling: 0.3 mg/m^3 fume applies to any operations or sectors for which the Cadmium standard is stayed or otherwise not in effect Ceiling: 0.6 mg/m^3 dust applies to any operations or sectors for which the Cadmium standard is stayed or otherwise not in effect	IDLH: 9 mg/m^3 dust IDLH: 9 mg/m^3 Cd dust and fume	TWA: 0.005 mg/m^3	-
Cadmium hydroxide (Cd(OH)2) (CAS #: 21041-95-2)	TWA: 0.01 mg/m^3 Cd TWA: 0.002 mg/m^3 Cd respirable fraction	-	-	TWA: 0.005 mg/m^3	-
Nickel hydroxide (CAS #: 12054-48-7)	TWA: 0.2 mg/m^3 Ni inhalable fraction	TWA: 1 mg/m^3 Ni (vacated) TWA: 1 mg/m^3 Ni	IDLH: 10 mg/m^3 Ni TWA: 0.015 mg/m^3 except Nickel carbonyl Ni	TWA: 0.05 mg/m^3	-

Chemical Name	Latvia	France	Finland	Germany	Italy
Nickel (CAS #: 7440-02-0)	TWA: 0.05 mg/m^3	TWA: 1 mg/m^3	TWA: 1 mg/m^3 TWA: 0.1 mg/m^3	Skin	-
Cadmium and compounds (as Cd) (CAS #: 7440-43-9)	TWA: 0.01 mg/m^3 STEL: 0.05 mg/m^3	TWA: 0.05 mg/m^3	TWA: 0.02 mg/m^3 Skin	Skin	-
Nickel hydroxide (CAS #: 12054-48-7)	TWA: 0.05 mg/m^3	TWA: 1 mg/m^3	TWA: 0.1 mg/m^3	Skin	-

Chemical Name	Poland	Portugal	Spain	Switzerland	Netherlands
Nickel (CAS #: 7440-02-0)	TWA: 0.25 mg/m^3	TWA: 1.5 mg/m^3	TWA: 1 mg/m^3	TWA: 0.5 mg/m^3	-
Cadmium and compounds (as Cd) (CAS #: 7440-43-9)	TWA: 0.01 mg/m^3 TWA: 0.002 mg/m^3	TWA: 0.01 mg/m^3 TWA: 0.002 mg/m^3	TWA: 0.01 mg/m^3 TWA: 0.002 mg/m^3	Skin TWA: 0.015 mg/m^3	-
Nickel hydroxide (CAS #: 12054-48-7)	TWA: 0.25 mg/m^3	TWA: 0.2 mg/m^3	TWA: 0.2 mg/m^3	TWA: 0.05 mg/m^3	-

Chemical Name	Norway	United Kingdom	Australia	Austria	Belgium
Nickel (CAS #: 7440-02-0)	TWA: 0.05 mg/m^3 STEL: 0.15 mg/m^3	STEL: 1.5 mg/m^3 TWA: 0.5 mg/m^3	1 mg/m^3	-	-

CENTRE TESTING INTERNATIONAL CORPORATION Build C,Hongwei Industrial Zone,Baoan 70 District,Shenzhen China www.cti-cert.com E-mail:info@cti-cert.com Hotline 400-6788-333

Cadmium and compounds (as Cd) (CAS #: 7440-43-9)	TWA: 0.05 mg/m^3 STEL: 0.15 mg/m^3	STEL: 0.075 mg/m^3 TWA: 0.025 mg/m^3	0.01 mg/m^3	-	-
Cadmium hydroxide (Cd(OH)2) (CAS #: 21041-95-2)	-	-	0.01 mg/m^3	-	-
Nickel hydroxide (CAS #: 12054-48-7)	TWA: 0.05 mg/m^3 STEL: 0.15 mg/m^3	TWA: 0.5 mg/m^3	-	-	-

Appropriate engineering controls

Showers
Eyewash stations
Ventilation systems

Individual protection measures, such as personal protective equipment

Respiratory protection	If exposure limits are exceeded or irritation is experienced, NIOSH/MSHA approved respiratory protection should be worn. Positive-pressure supplied air respirators may be required for high airborne contaminant concentrations. Respiratory protection must be provided in accordance with current local regulations.
Hand Protection	Wear protective gloves.
Eye/face protection	No special technical protective measures are necessary.
Skin and body protection	Wear suitable protective clothing.

9. PHYSICAL AND CHEMICAL PROPERTIES

Information on basic physical and chemical properties

Appearance	Solid
Color	No information available
Odor	Odorless
Odor Threshold	Not determined
pH	Not determined
Melting point/freezing point	Not determined
Boiling point / boiling range	Not determined
Flash point	Not applicable
Evaporation rate	Not determined
Flammability (solid, gas)	Not determined
Flammability Limit in Air	Not determined
Vapor Pressure	Not applicable
Vapor density	Not determined
Density	Not determined
Relative density	Not determined
Bulk density	Not determined
Specific gravity	Not determined
Water solubility	Not determined
Partition coefficient (LogPow)	Not determined
Autoignition temperature	Not determined
Decomposition temperature	Not determined
Kinematic viscosity	Not determined
Dynamic viscosity	Not determined
Explosive properties	Not an explosive
Oxidizing properties	Not determined

Other information

No information available

10. STABILITY AND REACTIVITY

Reactivity

Stable under recommended storage and handling conditions (see SECTION 7, handling and storage).

CENTRE TESTING INTERNATIONAL CORPORATION
Build C,Hongwei Industrial Zone,Baoan 70 District,Shenzhen China
www.cti-cert.com E-mail:info@cti-cert.com
Hotline 400-6788-333

Chemical stability

Stable under normal conditions

Possibility of Hazardous Reactions

None under normal processing

Conditions to avoid

Strong heating. Incompatible materials

Incompatible materials

Strong acids Strong bases Strong oxidizing agents

Hazardous Decomposition Products

None known based on information supplied

11. TOXICOLOGICAL INFORMATION

Information on likely routes of exposure

Inhalation	Inhalation of vapors in high concentration may cause irritation of respiratory system
Eye contact	Contact with eyes may cause irritation
Skin Contact	Substance may cause slight skin irritation
	Ingestion may cause irritation to mucous membranes

Information on toxicological effects

Acute toxicity

Chemical Name	Oral LD50	Dermal LD50	Inhalation LC50
Nickel (CAS #: 7440-02-0)	> 9000 mg/kg (Rat)	-	-
Cadmium and compounds (as Cd) (CAS #: 7440-43-9)	= 2330 mg/kg (Rat)	-	= 25 mg/m^3 (Rat) 30 min
Nickel hydroxide (CAS #: 12054-48-7)	-	-	= 1200 mg/m^3 (Rat) 4 h
Iron (CAS #: 7439-89-6)	98.6 g/kg bw (rat)	-	-

Skin corrosion/irritation

Non-irritating to the skin

Serious eye damage/eye irritation

No eye irritation

Sensitization

No information available

Germ cell mutagenicity

No information available

Carcinogenicity

This product does not contain any carcinogens or potential carcinogens as listed by OSHA, IARC or NTP

Chemical Name	ACGIH	IARC	NTP	OSHA
Nickel (CAS #: 7440-02-0)	-	Group 2B	Known Reasonably Anticipated	X
Cadmium and compounds (as Cd) (CAS #: 7440-43-9)	A2	Group 1	Known	X
Cadmium hydroxide (Cd(OH)2) (CAS #: 21041-95-2)	A2	-	-	-
Nickel hydroxide (CAS #: 12054-48-7)	A1	Group 1	Known	X

CENTRE TESTING INTERNATIONAL CORPORATION
Build C,Hongwei Industrial Zone,Baoan 70 District,Shenzhen China
www.cti-cert.com E-mail:info@cti-cert.com
Hotline 400-6788-333

Reproductive toxicity
No information available

STOT - single exposure
No information available

STOT - repeated exposure
No information available

Aspiration hazard
No information available

12. ECOLOGICAL INFORMATION

Ecotoxicity

Chemical Name	Algae/aquatic plants EC50	Fish LC50	Crustacea EC50
Nickel (CAS #: 7440-02-0)	0.18 mg/L/72h Pseudokirchneriella subcapitata 0.174 - 0.311 mg/L/96h Pseudokirchneriella subcapitata static	100 mg/L/96h Brachydanio rerio 1.3 mg/L/96h Cyprinus carpio semi-static 10.4 mg/L/96h Cyprinus carpio static	100 mg/L/48h Daphnia magna 1 mg/L/48h Daphnia magna Static
Cadmium and compounds (as Cd) (CAS #: 7440-43-9)	-	0.003: 96 h Oncorhynchus mykiss mg/L LC50 flow-through 0.006: 96 h Oncorhynchus mykiss mg/L LC50 static 0.002: 96 h Cyprinus carpio mg/L LC50 4.26: 96 h Cyprinus carpio mg/L LC50 semi-static 0.24: 96 h Cyprinus carpio mg/L LC50 static 21.1: 96 h Lepomis macrochirus mg/L LC50 flow-through 0.016: 96 h Oryzias latipes mg/L LC50 0.0004 - 0.003: 96 h Pimephales promelas mg/L LC50	0.0244: 48 h Daphnia magna mg/L EC50 Static
Iron (CAS #: 7439-89-6)	-	-	> 100 mg/L/48h (Daphnia magna)

Persistence and degradability
No information available

Bioaccumulative potential
No information available

Mobility in soil
No information available

Other adverse effects
No information available

13. DISPOSAL CONSIDERATIONS

Waste treatment methods

Disposal of wastes: Disposal should be in accordance with applicable regional, national and local laws and regulations

Contaminated packaging: Dispose of in accordance with federal, state and local regulations

Chemical Name	RCRA	RCRA - Basis for Listing	RCRA - D Series Wastes	RCRA - U Series Wastes

CENTRE TESTING INTERNATIONAL CORPORATION Build C,Hongwei Industrial Zone,Baoan 70 District,Shenzhen China www.cti-cert.com E-mail:info@cti-cert.com Hotline 400-6788-333

Nickel 7440-02-0	-	Included in waste streams: F006, F039	-	-
Cadmium and compounds (as Cd) 7440-43-9	-	Included in waste streams: F006, F039, K061, K069, K100	1.0 mg/L regulatory level	-

Chemical Name	California Hazardous Waste Status
Nickel 7440-02-0	Toxic powder Ignitable powder

14. TRANSPORT INFORMATION

It is considered as non-dangerous good by the ICAO, IATA, IMDG and TDG.

According to IATA DGR 56th Edition for transportation and International Maritime Dangerous Goods (IMDG Code 36th) and the Recommendation on the Transportation of Dangerous Goods-Model Regulation (18th)
The products are not subjects/subject to dangerous.

DOT / IMDG / IATA

UN/ID No. Not regulated
Proper shipping name Not regulated
Hazard Class Not regulated
Packing Group Not regulated
Special precautions No information available
Marine pollutant Not applicable

15. REGULATORY INFORMATION

International Inventories

Component	AICS	DSL/NDSL	EINECS/ELINCS	ENCS	IECSC	KECL	PICCS	TSCA
Nickel 7440-02-0 (10 - 30)	X	X	X	-	X	X	X	X
Cadmium and compounds (as Cd) 7440-43-9 (10 - 30)	X	X	X	-	X	X	X	X
Cadmium hydroxide (Cd(OH)2) 21041-95-2 (10 - 30)	X	X	-	-	X	-	-	-
Nickel hydroxide 12054-48-7 (10 - 30)	X	X	X	X	X	X	X	X
Iron 7439-89-6 (10 - 30)	X	X	X	-	X	X	X	X

"-" Not Listed
"X" Listed

US Federal Regulations

SARA 313

Section 313 of Title III of the Superfund Amendments and Reauthorization Act of 1986 (SARA). This product contains a chemical or chemicals which are subject to the reporting requirements of the Act and Title 40 of the Code of Federal Regulations, Part 372

Chemical Name	SARA 313 - Threshold Values %
Nickel - 7440-02-0	0.1
Cadmium and compounds (as Cd) - 7440-43-9	0.1
Nickel hydroxide - 12054-48-7	0.1

CENTRE TESTING INTERNATIONAL CORPORATION
Build C,Hongwei Industrial Zone,Baoan 70 District,Shenzhen China
www.cti-cert.com E-mail:info@cti-cert.com
Hotline 400-6788-333

SARA 311/312 Hazard Categories

Does not apply

CWA (Clean Water Act)

This product contains the following substances which are regulated pollutants pursuant to the Clean Water Act (40 CFR 122.21 and 40 CFR 122.42)

Chemical Name	CWA - Reportable Quantities	CWA - Toxic Pollutants	CWA - Priority Pollutants	CWA - Hazardous Substances
Nickel 7440-02-0	-	X	X	-
Cadmium and compounds (as Cd) 7440-43-9	-	X	X	-
Cadmium hydroxide (Cd(OH)2) 21041-95-2	-	X	-	-
Nickel hydroxide 12054-48-7	-	X	-	X

CERCLA

This material, as supplied, contains one or more substances regulated as a hazardous substance under the Comprehensive Environmental Response Compensation and Liability Act (CERCLA) (40 CFR 302)

Chemical Name	Hazardous Substances RQs	CERCLA/SARA RQ	Reportable Quantity (RQ)
Nickel 7440-02-0	100 lb	-	RQ 100 lb final RQ RQ 45.4 kg final RQ
Cadmium and compounds (as Cd) 7440-43-9	10 lb	-	RQ 10 lb final RQ RQ 4.54 kg final RQ
Nickel hydroxide 12054-48-7	10 lb	-	RQ 10 lb final RQ RQ 4.54 kg final RQ

US State Regulations

California Proposition 65

This product contains the following Proposition 65 chemicals

Chemical Name	California Proposition 65
Nickel - 7440-02-0	Carcinogen
Cadmium and compounds (as Cd) - 7440-43-9	Carcinogen Developmental Male Reproductive
Cadmium hydroxide (Cd(OH)2) - 21041-95-2	Carcinogen
Nickel hydroxide - 12054-48-7	Carcinogen

U.S. State Right-to-Know Regulations

This product may contain substances regulated by state right-to-know regulations

Chemical Name	New Jersey	Massachusetts	Pennsylvania
Nickel 7440-02-0	X	X	X
Cadmium and compounds (as Cd) 7440-43-9	X	X	X
Nickel hydroxide 12054-48-7	X	X	X

16. OTHER INFORMATION

Revision Note

Issue Date	21-Jan-2015
Revision date	21-Jan-2015
Revision Note	Not applicable

Key or legend to abbreviations and acronyms used in the safety data sheet

TWA - TWA (time-weighted average)
STEL - STEL (Short Term Exposure Limit)
Ceiling - Maximum limit value
TSCA - United States Toxic Substances Control Act Section 8(b) Inventory

CENTRE TESTING INTERNATIONAL CORPORATION
Build C,Hongwei Industrial Zone,Baoan 70 District,Shenzhen China
www.cti-cert.com E-mail:info@cti-cert.com
Hotline 400-6788-333

DSL/NDSL - Canadian Domestic Substances List/Non-Domestic Substances List
EINECS/ELINCS - European Inventory of Existing Chemical Substances/European List of Notified Chemical Substances
ENCS - Japan Existing and New Chemical Substances
IECSC - China Inventory of Existing Chemical Substances
KECL - Korean Existing and Evaluated Chemical Substances
PICCS - Philippines Inventory of Chemicals and Chemical Substances
AICS - Australian Inventory of Chemical Substances

Disclaimer

The information provided in this Material Safety Data Sheet is correct to the best of our knowledge, information and belief at the date of its publication. The information given is designed only as a guidance for safe handling, use, processing, storage, transportation, disposal and release and is not to be considered a warranty or quality specification. The information relates only to the specific material designated and may not be valid for such material used in combination with any other materials or in any process, unless specified in the text.

-------- End of Safety Data Sheet --------

CENTRE TESTING INTERNATIONAL CORPORATION
Build C,Hongwei Industrial Zone,Baoan 70 District,Shenzhen China
www.cti-cert.com E-mail:info@cti-cert.com
Hotline 400-6788-333

PHILIPS

Philips Lighting Company

MATERIAL SAFETY DATA SHEET

PRODUCT: ALTO™ Fluorescent T8 U-Bent Lamp (F32 T8/TL 800 Series)

SECTION 1: MANUFACTUERER

Manufacturer's Name and Address:

Philips Lighting Company
A Division of Philips Electronics
North America Corporation
200 Franklin Square Drive
P.O. Box 6800
Somerset, NJ 08875

Emergency Telephone Number: (800) 424-9300 CHEMTREC
Other Information Calls: (732) 563-3197 Safety and Compliance

SECTION 2: HAZARDOUS INGREDIENTS

	OSHA (PEL) mg/m^3	ACGIH (TLV) mg/m^3	% by Wt.
Phosphor Powder			
Nuisance Dust	15	10	Approx. 2.5
Cerium Terbium Magnesium Aluminate*	N/A	10	Approx. .25
Barium Magnesium Aluminate*	N/A	1.0	Approx. .5
Yttrium Oxide (1314-36-9)	1.0	1.0	Approx. .5
Antimony*(7440-36-0)	.5	.5	Approx .01%
Manganese*(7439-96-5)	.5	.2	Approx .02%
Mercury (7439-97-6)	.1	.025	< than 20 ppm

*PEL and TLV are given for magnesium, aluminum oxide, yttrium, antimony, and mangenese. Barium aluminate is not a soluble compound. Antimony and Manganese are tightly bound within the crystal matrix of the phosphor (Calcium Phosphate).

SECTION 3: CHEMICAL/PHYSICAL DATA

Not applicable. This item is a light bulb. The bulb is glass, the base is a coated aluminum. The coating is inert.

SECTION 4: FIRE AND EXPLOSION DATA

FIRE AND EXPLOSION DATA NOT APPLICABLE -- under extreme heat, glass envelope might melt or crack.

SECTION 5: REACTIVITY DATA

Stability: Lamp is stable.
Polymerization: Not applicable.
Incompatibility: Glass will react with Hydrofluoric Acid.

SECTION 6: HEALTH HAZARD DATA

Not applicable to the intact lamp. Breakage of the lamp may result in some exposure to the phosphor powder dust and to a very little amount of elemental mercury vapor. No adverse affects are expected from occasional exposure to broken lamps, but as a matter of good practice, prolonged or frequent exposure should be avoided through the use of adequate ventilation during disposal of large quantities of lamps.

EMERGENCY FIRST AID: NORMAL FIRST AID PROCEDURE FOR GLASS CUTS IF SUCH OCCUR THROUGH LAMP BREAKAGE.

SECTION 7: PRECAUTIONS FOR SAFE HANDLING AND USE

Normal precautions should be taken for the collection of broken glass.

Waste Disposal Method: At the end of rated life, when this lamp is removed from service, it will be subjected to the current Toxic Characteristic Leaching Procedure (TCLP) prescribed by the Environmental Protection Agency. This test is used to determining whether an item is a hazardous waste or a non-hazardous waste under current E. P. A. definition. Philips Lighting will provide the test data on request. This result will allow the generator to evaluate all of the disposal options, which may be available in the particular state in which the generator's facility is located. The generator should check with federal, state and local officials for their guidance. In most states ALTO lamps are considered non-hazardous subtitle D waste. Philips encourages recycling of its products by qualified recyclers.

SECTION 8: CONTROL MEASURES

Respiratory Protection: Appropriate dust mask should be used if large quantities of lamps are being broken for disposal.

Ventilation: Avoid inhalation of any airborne dust. Provide local exhaust when disposing of large quantities of lamps.

Hand and Eye Protection: Appropriate hand and eye protection should be worn when disposing of large quantities of lamps or handling broken lamps.

SECTION 9: REGULATORY ISSUES

As a product these mercury containing lamps being shipped in the manufacturer's original packaging are not regulated by air, truck or ocean shipment. As a waste, spent ALTO fluorescent lamps maybe regulated in various states and local communities. This material safety data sheet does not constitute "knowledge of the waste", in certain jurisdictions. TCLP data will be furnished upon request.

SAFETY DATA SHEET

Issuing Date 04-Jan-2016 **Revision Date** 04-Jan-2016 **Revision Number** 3

The supplier identified below generated this SDS using the UL SDS template. UL did not test, certify, or approve the substance described in this SDS, and all information in this SDS was provided by the supplier or was reproduced from publically available regulatory data sources. UL makes no representations or warranties regarding the completeness or accuracy of the information in this SDS and disclaims all liability in connection with the use of this information or the substance described in this SDS. The layout, appearance and format of this SDS is © 2014 UL LLC. All rights reserved.

1. IDENTIFICATION OF THE SUBSTANCE/PREPARATION AND OF THE COMPANY/UNDERTAKING

Product identifier

Product Name **Philips T5 Flourescent Lamps**

Other means of identification

Synonyms None

Recommended use of the chemical and restrictions on use

Recommended Use Lights, Fluorescent

Uses advised against No information available

Details of the supplier of the safety data sheet

Supplier Name Philips Consumer Lifestyle

Supplier Address 1600 Summer St
Stamford
CT
06905
US

Supplier Phone Number Phone:203-351-5000
Fax:888-466-7352
Contact Phone479-464-2829

Supplier Email David.Harris@philips.com

Emergency telephone number

2. HAZARDS IDENTIFICATION

Classification

This chemical is not considered hazardous by the 2012 OSHA Hazard Communication Standard (29 CFR 1910.1200). This product is an article which is a CFL bulb and as such does not require an MSDS per the OSHA hazard communication standard unless ruptured. The hazards indicated are for a ruptured CFL bulb.

Acute toxicity - Oral	Category 4

GHS Label elements, including precautionary statements

Emergency Overview

Signal word **Warning**

Hazard Statements
Harmful if swallowed



This product is an article which contains a chemical substance. Safety information is given for exposure to the article as sold. Intended use of the product should not result in exposure to the chemical substance. This is a CFL bulb. In case of rupture: the above hazards exist.

Appearance White **Physical state** Solid **Odor** Odorless

Precautionary Statements - Prevention
Wash face, hands and any exposed skin thoroughly after handling
Do not eat, drink or smoke when using this product

Precautionary Statements - Response

Ingestion
IF SWALLOWED: Call a POISON CENTER or doctor/physician if you feel unwell
Rinse mouth

Precautionary Statements - Storage
None

Precautionary Statements - Disposal
Dispose of contents/container to an approved waste disposal plant

Hazards not otherwise classified (HNOC)

Not applicable

Unknown Toxicity
96 % of the mixture consists of ingredient(s) of unknown toxicity

Other information

Causes mild skin irritation

Interactions with Other Chemicals
No information available.

3. COMPOSITION/INFORMATION ON INGREDIENTS

.

Chemical name	CAS No	Weight-%	Trade Secret
Bis[2-(diphenylphosphino)phenyl] ether	166330-10-5	1 - 5	*

*The exact percentage (concentration) of composition has been withheld as a trade secret

4. FIRST AID MEASURES

First aid measures

General Advice First aid is upon rupture of sealed CFL bulb.

Eye contact Rinse thoroughly with plenty of water, also under the eyelids. If symptoms persist, call a physician.

Skin contact Wash with soap and water.

Inhalation Remove to fresh air.

Ingestion Do NOT induce vomiting. Rinse mouth immediately and drink plenty of water. Never give anything by mouth to an unconscious person. Call a physician.

Most important symptoms and effects, both acute and delayed

Most Important Symptoms and Effects No information available.

Indication of any immediate medical attention and special treatment needed

Notes to Physician Treat symptomatically.

5. FIRE-FIGHTING MEASURES

Suitable Extinguishing Media
Use extinguishing measures that are appropriate to local circumstances and the surrounding environment.

Unsuitable extinguishing media
CAUTION: Use of water spray when fighting fire may be inefficient.

Specific hazards arising from the chemical
No information available.

Explosion Data
Sensitivity to Mechanical Impact None.

Sensitivity to Static Discharge None.

Protective equipment and precautions for firefighters
As in any fire, wear self-contained breathing apparatus pressure-demand, MSHA/NIOSH (approved or equivalent) and full protective gear.

6. ACCIDENTAL RELEASE MEASURES

Personal precautions, protective equipment and emergency procedures

Personal precautions Avoid contact with skin, eyes or clothing. Use personal protective equipment as required.

Environmental precautions

Environmental precautions See Section 12 for additional Ecological Information.

Methods and material for containment and cleaning up

Methods for containment Prevent further leakage or spillage if safe to do so.

Methods for cleaning up Pick up and transfer to properly labeled containers.

7. HANDLING AND STORAGE

Precautions for safe handling

Handling In case of rupture: Handle in accordance with good industrial hygiene and safety practice. Avoid contact with skin, eyes or clothing. Do not eat, drink or smoke when using this product. Take off contaminated clothing and wash before reuse.

Conditions for safe storage, including any incompatibilities

Storage Keep containers tightly closed in a dry, cool and well-ventilated place. Keep out of the reach of children.

Incompatible Products None known based on information supplied.

8. EXPOSURE CONTROLS/PERSONAL PROTECTION

Control parameters

Exposure Guidelines This product, as supplied, does not contain any hazardous materials with occupational exposure limits established by the region specific regulatory bodies

Appropriate engineering controls

Engineering Measures Showers
Eyewash stations
Ventilation systems

Individual protection measures, such as personal protective equipment

Eye/face protection No special protective equipment required.

Skin and body protection No special protective equipment required.

Respiratory protection If exposure limits are exceeded or irritation is experienced, NIOSH/MSHA approved respiratory protection should be worn. Positive-pressure supplied air respirators may be required for high airborne contaminant concentrations. Respiratory protection must be provided in accordance with current local regulations.

Hygiene Measures Handle in accordance with good industrial hygiene and safety practice.

9. PHYSICAL AND CHEMICAL PROPERTIES

Physical and Chemical Properties

Physical state	Solid		
Appearance	White	**Odor**	Odorless
Color	No information available	**Odor Threshold**	No information available

Property	**Values**	**Remarks Method**
pH	No data available	None known
Melting / freezing point	No data available	None known
Boiling point / boiling range	No data available	None known
Flash Point	No data available	None known
Evaporation Rate	No data available	None known
Flammability (solid, gas)	No data available	None known
Flammability Limit in Air		
Upper flammability limit	No data available	
Lower flammability limit	No data available	
Vapor pressure	No data available	None known
Vapor density	No data available	None known
Specific Gravity	No data available	None known
Water Solubility	incompatible	None known
Solubility in other solvents	No data available	None known
Partition coefficient: n-octanol/water	No data available	None known
Autoignition temperature	No data available	None known
Decomposition temperature	No data available	None known
Kinematic viscosity	No data available	None known
Dynamic viscosity	No data available	None known
Explosive properties	No data available	
Oxidizing properties	No data available	

Other Information

Softening Point	No data available
VOC Content (%)	No data available
Particle Size	No data available
Particle Size Distribution	

10. STABILITY AND REACTIVITY

Reactivity

No data available.

Chemical stability
Stable under recommended storage conditions.
Possibility of Hazardous Reactions
None under normal processing.
Conditions to avoid
None known based on information supplied.
Incompatible materials
None known based on information supplied.
Hazardous Decomposition Products
None known based on information supplied.

11. TOXICOLOGICAL INFORMATION

Information on likely routes of exposure

Product Information	Product does not present an acute toxicity hazard based on known or supplied information. In case of rupture:.
Inhalation	Specific test data for the substance or mixture is not available.
Eye contact	Specific test data for the substance or mixture is not available.
Skin contact	Specific test data for the substance or mixture is not available.
Ingestion	Specific test data for the substance or mixture is not available. Harmful if swallowed. (based on components).
Component Information	No information available

Information on toxicological effects

Symptoms	No information available.

Delayed and immediate effects as well as chronic effects from short and long-term exposure

Sensitization	No information available.
Mutagenic Effects	No information available.
Carcinogenicity	Contains no ingredient listed as a carcinogen.
Reproductive toxicity	No information available.
STOT - single exposure	No information available.
STOT - repeated exposure	No information available.
Target Organ Effects	None known.

Aspiration Hazard No information available.

Numerical measures of toxicity Product Information

The following values are calculated based on chapter 3.1 of the GHS document

ATEmix (oral)
500.00 mg/kg

12. ECOLOGICAL INFORMATION

Ecotoxicity
The environmental impact of this product has not been fully investigated.

Persistence and Degradability
No information available.

Bioaccumulation
No information available

Other adverse effects
No information available.

13. DISPOSAL CONSIDERATIONS

Waste treatment methods

Disposal methods This material, as supplied, is a hazardous waste according to federal regulations (40 CFR 261).

Contaminated Packaging Dispose of contents/containers in accordance with local regulations.

US EPA Waste Number D009

California Hazardous Waste Codes M003

14. TRANSPORT INFORMATION

DOT NOT REGULATED
Proper Shipping Name NON REGULATED
Hazard Class N/A

TDG Not regulated

MEX Not regulated

ICAO Not regulated

IATA Not regulated
Proper Shipping Name NON REGULATED
Hazard Class N/A

IMDG/IMO Not regulated
Hazard Class N/A
Marine Pollutant Product is a marine pollutant according to the criteria set by IMDG/IMO This product contains a chemical which is listed as a severe marine pollutant according to IMDG/IMO

RID Not regulated

ADR Not regulated

ADN Not regulated

15. REGULATORY INFORMATION

International Inventories

TSCA	Complies
DSL	All components are listed either on the DSL or NDSL.

TSCA - United States Toxic Substances Control Act Section 8(b) Inventory
DSL/NDSL - Canadian Domestic Substances List/Non-Domestic Substances List

US Federal Regulations

SARA 313
Section 313 of Title III of the Superfund Amendments and Reauthorization Act of 1986 (SARA). This product does not contain any chemicals which are subject to the reporting requirements of the Act and Title 40 of the Code of Federal Regulations, Part 372

SARA 311/312 Hazard Categories

Acute Health Hazard	No
Chronic Health Hazard	No
Fire Hazard	No
Sudden release of pressure hazard	No
Reactive Hazard	No

CWA (Clean Water Act)
This product does not contain any substances regulated as pollutants pursuant to the Clean Water Act (40 CFR 122.21 and 40 CFR 122.42)

CERCLA
This material, as supplied, does not contain any substances regulated as hazardous substances under the Comprehensive Environmental Response Compensation and Liability Act (CERCLA) (40 CFR 302) or the Superfund Amendments and Reauthorization Act (SARA) (40 CFR 355). There may be specific reporting requirements at the local, regional, or state level pertaining to releases of this material

US State Regulations

California Proposition 65
This product contains the following Proposition 65 chemicals.

Chemical name	California Proposition 65
Mercury - 7439-97-6	Developmental

U.S. State Right-to-Know Regulations

.

Chemical name	New Jersey	Massachusetts	Pennsylvania	Rhode Island	Illinois
Mercury 7439-97-6	X	X	X	X	X

International Regulations

Canada
WHMIS Hazard Class
Non-controlled

16. OTHER INFORMATION

NFPA	**Health Hazards** 1	**Flammability** 0	**Instability** 0	**Physical and Chemical Hazards** -
HMIS	**Health Hazards** 0	**Flammability** 0	**Physical Hazard** 0	**Personal Protection** X

Prepared By
Product Stewardship
23 British American Blvd.
Latham, NY 12110
1-800-572-6501

Issuing Date 04-Jan-2016
Revision Date 04-Jan-2016
Revision Note No information available

Disclaimer
The information provided in this Safety Data Sheet is correct to the best of our knowledge, information and belief at the date of its publication. The information given is designed only as a guidance for safe handling, use, processing, storage, transportation, disposal and release and is not to be considered a warranty or quality specification. The information relates only to the specific material designated and may not be valid for such material used in combination with any other materials or in any process, unless specified in the text

End of Safety Data Sheet

PHILIPS

Philips Lighting Company

MATERIAL SAFETY DATA SHEET

PRODUCT: T-5 Silhouette Standard and HO

Revised: 8/02

SECTION 1: MANUFACTURER

Manufacturer's Name and Address: Philips Lighting Company
A Division of Philips Electronics
North America Corporation
200 Franklin Square Drive
PO Box 6800
Somerset, NJ 08875

Emergency Telephone Number: (800) 424-9300 CHEMTREC
(732) 563-3197 Safety and Compliance

Other Information Calls: (732) 563-3089

SECTION 2: HAZARDOUS INGREDIENTS

	OSHA PEL	ACGIH	PERCENTAGE
Phosphor Powder			
Nuisance dust	15 mg/m3	10mg/m3	approx. 2.5%
Yttrium Oxide: Europium (68585-82-0)	1mg/m3	1mg/m3	approx. .8%
Barium Carbonate (0513-77-9)	0.5mg/m3	0.5mg/m3	approx. .3%
Manganese Carbonate (598-62-9)	5.0mg/m3	5.0 mg/m3	approx. .3%
Aluminum Oxide (1344-28-1)	15 mg/m3	10 mg/m3	approx. .3%
Cerium Oxide			approx. .2%
Gadolinium Oxide			approx. .2%
Terbium Oxide (12036-41-8)			approx. .2%
Magnesium Oxide (1309-48-4)	15mg/m3	10mg/3	approx. .2%
Boric Oxide (1303-86-2)	10mg/m3	10mg/m3	approx. .2%
Mercury (7439-97-6)	.1mg/m3	.025mg/m3	less than .01%

These materials are essentially ceramic phosphors (except for the mercury). The ceramics are Barium Aluminate<Yttrium Oxide and a Cerium Terbium Borate mixture. The PELs and TLV are given where available for the base components. There is no data on the ceramic mixtures as mixtures.

SECTION 3: PHYSICAL CHEMICAL CHARACTERISTICS

Not applicable. These items are light bulbs with 5/8 inch diameter and various lengths up to a nominal five feet (lengths are actually metric).

SECTION 4: FIRE AND EXPLOSION DATA

Fire and explosion data not applicable. Under extreme heat glass envelope might melt or crack.

SECTION 5: REACTIVITY DATA

Stability:	Lamp is stable
Incompatibility:	Glass will react with Hydrofluoric Acid
Polymerization:	Not applicable

SECTION 6: HEALTH EFFECTS

Not applicable for the intact lamp. Breakage of the lamp may result in some exposure to the phosphor powder dust/and to elemental mercury vapor. No adverse affects are expected from occasional exposure to broken lamps, but as a matter of good practice, prolonged or frequent exposure should be avoided through the use of adequate ventilation during disposal of large quantities of lamps.

Emergency and First Aid Procedure: Normal first aid procedure for glass cuts if such occur through lamp breakage.

SECTION 7: PRECAUTIONS FOR SAFE HANDLING AND USE

Normal precautions should be taken for the collection of broken glass.

Waste Disposal Method: At the end of rated life, when this lamp is removed from service, it will be subjected to the current Toxic Characteristic Leaching Procedure (TCLP) prescribed by the Environmental Protection Agency. This test is used to determining whether an item is a hazardous waste or a non-hazardous waste under current E. P. A. definition. These lamps would fail the TCLP test and would be considered hazardous under the Universal Waste Rules. Generators should evaluate all of the disposal options, which may be available in the particular state in which the generator's facility is located. The generator should check with federal, state and local officials for their guidance. Philips encourages recycling of its products by qualified recyclers.

SECTION 8: CONTROL MEASURES

Respiratory Protection: None. NIOSH-approved respirator might be used if large volumes of lamps are being broken for disposal.

Ventilation: Avoid inhalation of any airborne dust.
Provide local exhaust when disposing large quantities of lamps.

Hand and Eye Protection: Appropriate hand and eye protection should be worn when disposing of lamps or handling broken glass.

SECTION 9: REGULATORY INFORMATION

As a product these mercury containing lamps being shipped in the manufacturer's original packaging are not regulated by air, truck or ocean shipment. As a waste, these spent fluorescent lamps would be regulated in various states and local communities. This material safety data sheet does not constitute "knowledge of the waste", in certain jurisdictions.

PHILIPS

PHILIPS

Philips Lighting Company

Lamp Material Data Sheet (LMDS)

LMDS #: TL12-13100A
Date: 12/31/2015

Product: Philips T12 Fluorescent Lamps – All Types

All ALTO, non-ALTO, Standard, HO, Circular, U-Bent and TuffGuard
All lengths, coatings, wattages

Section 1. Manufacturer and Contact Information

Philips Lighting North America Corporation
200 Franklin Square Drive
Somerset, NJ 08873-4186

24 HR Emergency Phone Number: (800) 424-9300 CHEMTREC
Other Information Calls: (800) 555-0050 Philips Lighting Technical Information

Section 2. Hazardous Ingredients/Identity Information

These lamps contain the following materials:

Material	(CAS #)	Exposure Limits OSHA PEL mg/m^3	ACGIH TLV mg/m^3	PERCENTAGE by weight
Glass	(65997-17-3)	15	10	~96.0%
Phosphor Powder As Nuisance Dust		15	10	~2.5%
Mercury	(7439-97-6)	0.1	0.025	~0.01%
Polyethylene Terephthalate (PET)	(25038-59-9)	-	-	~3.0%

Phosphor powders are ceramic phosphors. There is no data for the ceramics as mixtures. PET sleeving is applied to TuffGuard versions of the lamps to retain materials in the event of lamp breakage.

Section 3. Physical Properties

Not applicable to an intact lamp. These items are light bulbs 1 1/2 inch in diameter and range from 12 to 96 inches in length.

Section 4. Fire and Explosion Hazards

Not applicable to an intact lamp. If subjected to extreme heat, the glass, and plastic (if present), components of the lamp may crack or melt and may emit toxic fumes. Use extinguishing media appropriate for combustibles in the area.

Section 5. Reactivity

Not applicable to an intact lamp.

Section 6. **Health Hazards**

Not applicable to an intact lamp. Breakage of the lamp may result in some exposure to the phosphor powder and to elemental mercury. No adverse effects are expected from occasional exposure to broken lamps, but as a matter of good practice, prolonged exposure should be avoided through the use of adequate ventilation during the disposal of large quantities of lamps.

Guidance on cleaning up a broken lamp can be obtained from http://www2.epa.gov/cfl/cleaning-broken-cfl.

Emergency and First Aid Procedures: Apply normal first aid for glass cuts if such should occur through lamp breakage.

Section 7. **Lamp Disposal Procedures**

Normal precautions should be taken for the collection of glass particles in the event a lamp is broken.

Waste Disposal Method: All fluorescent lamps contain some amount of mercury. When a fluorescent lamp is to be disposed, it is subject to the current EPA Toxicity Characteristic Leaching Procedure (TCLP) disposal criteria. This test is used to determine if an item can be managed as hazardous or non-hazardous waste.

Philips low-mercury ALTO fluorescent lamps are identifiable by their characteristic green end caps. Philips ALTO lamps are TCLP compliant and can be managed as non-hazardous waste. Philips will provide TCLP test data upon request.

Philips non-ALTO lamps (with silver end caps) are not TCLP compliant and should be managed as a hazardous waste under the EPA Universal Waste Rules for fluorescent lamps.

All disposal options should be evaluated with respect to federal, state, and local requirements. Before disposing of waste lamps, check with federal, state, and/or local officials for current guidelines and regulations. Philips encourages recycling of its products through qualified recycling facilities.

Section 8. **Control Measures**

Respiratory Protection: None. NIOSH-approved respirator should be used if large quantities of lamps are being broken for disposal.
Ventilation: Avoid inhalation of any airborne dust. Provide local exhaust when disposing of large quantities of lamps.
Hand and Eye Protection: Appropriate hand and eye protection should be worn when disposing of lamps and/or handling broken glass.

Section 9. **Regulatory Information**

As a product, these mercury-containing lamps, when shipped in the manufacturer's original packaging, are not regulated by air, truck, or ocean shipment. As a waste, these lamps may be regulated in various states and local communities. This safety data sheet does not constitute "knowledge of the waste" in certain jurisdictions.

This document supercedes previous document: LMDS TL12-13100 issued 07/10/2013

Occupational Health and Safety Administration (OSHA) Material Safety Data Sheet (MSDS) requirements for materials are not applicable to manufactured articles in which individuals would not be subjected to materials contained in the article during its normally intended use. The information in this document is provided as a courtesy and is intended to provide relevant information in the event the articles it covers are encountered during unintended, or abnormal, circumstances.

Frequently Asked Questions (FAQ)